Optional Kits available through your Distributor:

Flipper Rebuild Kit (Left) **500-6307-10**

Flipper Base Plate Kit (Left) **515-6617-01**

Kit includes: *Flipper Base Plate (Left) pre-threaded with securing hardware; see the Flipper Drawing for view.*

Flipper Rebuild Kit (Right) **500-6307-00**

Flipper Base Plate Kit (Right) **515-6617-00**

Kit includes: *Flipper Base Plate (Left) pre-threaded with securing hardware; see the Flipper Drawing for view.*

Pinball Location Maintenance Standard Kit (for Rolling Stones Pinball) **502-6002-B8**

Standard Kit includes : *8 oz. Novus Wax #2 Fine (Red) (**675-0003-01**), Cloth, Rubber Rings (used above playfield), Bulbs (Bulb quantities vary and is limited to 25 per type), Fuses (1/per type) and 4 Pinballs.* ***Note:*** *Quanties, sizes and contents subject to change without notice.*

Pinball Location Maintenance Deluxe Kit (for Rolling Stones Pinball) **502-6003-B8**

Deluxe Kit includes : *Pinball Location Maintenance Standard Kit as described above plus a quantity of Flipper Rebuild Kits.* ***Note:*** *Quantity varies which equals the same quantity of flippers used in this game.*

▲ THIS GAME KIT INCLUDES (2) FLIPPER REBUILD KITS ▲

Plastics*Kit (for Rolling Stones Pinball) **803-5000-B8**

Plastics Kit includes: *Plastic Sets (830-6130-XX)*

Decals*Kit (for Rolling Stones Pinball) **802-5000-B8**

Decals Kit includes: *Decal Set (820-6580-XX)*

Mylar*Kit (for Rolling Stones Pinball) **802-5001-B8**

Mylar Kit includes: *Pop Bumper (820-6584-00)*

Attention: *No individual Plastic or Decal can be ordered separately, unless noted otherwise. Plastics & Decals are subject to change without notice during and / or after production. Key Fobs subject to availability and may or may not be included in the plastic set. All designs, shapes & pieces used subject to change without notice. Kit contents subject to change. Service Bulletin(s) will announce any critical changes, if warranted. The last 2-digits shown on plastics or decals are for reference only.*

Ball Shooter (Plunger) Assembly, 500-6146-00-04 (Items 1-6)

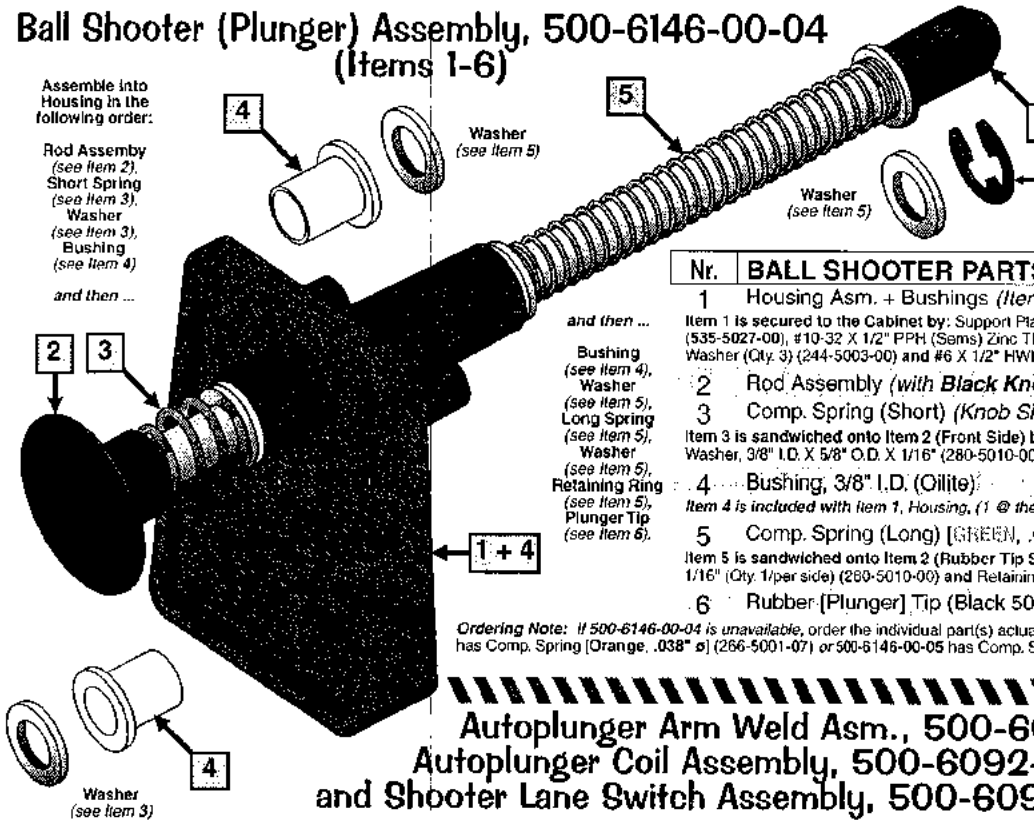

Securing Hardware for Items 3 & 5 are also shown separated from the Ball Shooter (Plunger) Assembly for clarity.

Nr.	BALL SHOOTER PARTS	QTY.	SPI PART Nr.
1	Housing Asm. + Bushings *(Item 4)*	1	535-5067-02
	Item 1 is secured to the Cabinet by: Support Plate [not included with Item 1 *or* Assembly] (535-5027-00), #10-32 X 1/2" PPH (Sems) Zinc TF (Qty. 3) (237-6033-00), #10 Split Lock Washer (Qty. 3) (244-5003-00) **and** #6 X 1/2" HWH AB (Zinc) Red (Qty. 2) (234-5001-02)		
2	Rod Assembly *(with **Black Knob**)*	1	515-6557-00
3	Comp. Spring (Short) *(Knob Side)*	1	266-5010-00
	Item 3 is sandwiched onto Item 2 (Front Side) between the knob and by: Washer, 3/8" I.D. X 5/8" O.D. X 1/16" (280-5010-00)		
4	Bushing, 3/8" I.D. (Oilite)	2	280-5010-00
	Item 4 is included with Item 1, Housing, (1 @ the front; 1 @ the back) as shown.		
5	Comp. Spring (Long) [GREEN, .035" ø]	1	266-5001-04
	Item 5 is sandwiched onto Item 2 (Rubber Tip Side) by: Washer, 3/8" I.D. X 5/8" O.D. X 1/16" (Qty. 1/per side) (280-5010-00) **and** Retaining Ring, 3/8" ø Shaft (270-5012-00)		
6	Rubber [Plunger] Tip (Black 50 Duro)	1	545-5276-00

Ordering Note: *If 500-6146-00-04 is unavailable,* order the individual part(s) actually required. ... Identical to **500-6146-00-07** has Comp. Spring [**Orange**, **.038" ø**] (266-5001-07) *or* **500-6146-00-05** has Comp. Spring [**Blue**, **.031" ø**] (266-5001-05).

Autoplunger Arm Weld Asm., 500-6091-00 (Items 1-5), Autoplunger Coil Assembly, 500-6092-02-ND (Items 6-9) and Shooter Lane Switch Assembly, 500-6096-00 (Items 10-12)

Nr.	AUTOPL. ARM WELD PARTS	QTY.	SPI PART Nr.
1	Arm Weld Assembly	1	515-6526-00
	Item 1 is secured to Item 2 by: Retaining Ring, 1/4" ø Shaft (Qty. 1) (270-5002-00)		
2	Autoplunger Fulcrum	1	535-7697-00
3	Nyliner, 1/4" (Thomson #411-FF)	2	545-5423-00
4	Plunger & Link Assembly	1	511-5183-00
	Item 4 is secured to Item 1 by: Retaining Ring, 1/4" ø Shaft (Qty. 1) (270-5002-00) *For Individual Items use :* Plunger 1.81" Lg. **(530-5025-05)**, Plunger Link **(545-5293-00)** **and** Roll Pin 1/8" ø x 5/8" Lg. **(251-5008-00)**		
5	Compression (Return) Spring	1	266-5020-00
	(ASM. REF. 500-6091-00, Items 1-5)		

Nr.	AUTOPLNGR. COIL PARTS	QTY.	SPI PART Nr.
6	Autoplunger Coil Bracket Assembly	1	515-6527-00
	Items 1 & 6 are secured below the P/F by: #8 X 1/2" SHWH AB (Zc.) (Qty. 9) (234-5101-00)		
7	Coil Retainer Bracket	1	535-5203-03
	Item 7 is secured to Item 6 by: #8-32 X 1/4" PPH MS (Sems) Zinc (Qty. 2) (232-5300-00)		
8	Coil, 24-940 [NO DIODE]	1	090-5036-ND
	COIL DOES NOT REQUIRE A DIODE. SEE ⍉ COIL NOTE BELOW FOR DETAILS.		
9	Coil Sleeve	1	545-5031-00
	(ASM. REF. 500-6092-02-ND, Items 6-9)		

Nr.	SWITCH PARTS	QTY.	SPI PART Nr.
10	Switch *(for Shooter Lane)*	1	180-5157-00
	Switch has a Diode (1N4004) (112-5003-00). *Can be replaced with (1N4001) (112-5001-00)*		
11	Switch Mounting Bracket	1	535-6173-00
	Item 11 is secured to Playfield by: #6 X 1/2" SLT HWH AB (Zinc) (Qty. 2) (234-5001-02)		
12	Switch Body Protect Plate	1	535-6539-00
	Item 12 is secured to Items 10-11 by: #2-56 X 1/2" Unslotted Ser. HWH #4 Head TR3 Black (Qty. 2) (237-5937-02) **and** #2-56 Hex Nut (Qty. 2) (240-5301-0)		
	(ASM. REF. 500-6096-00, Items 10-12)		

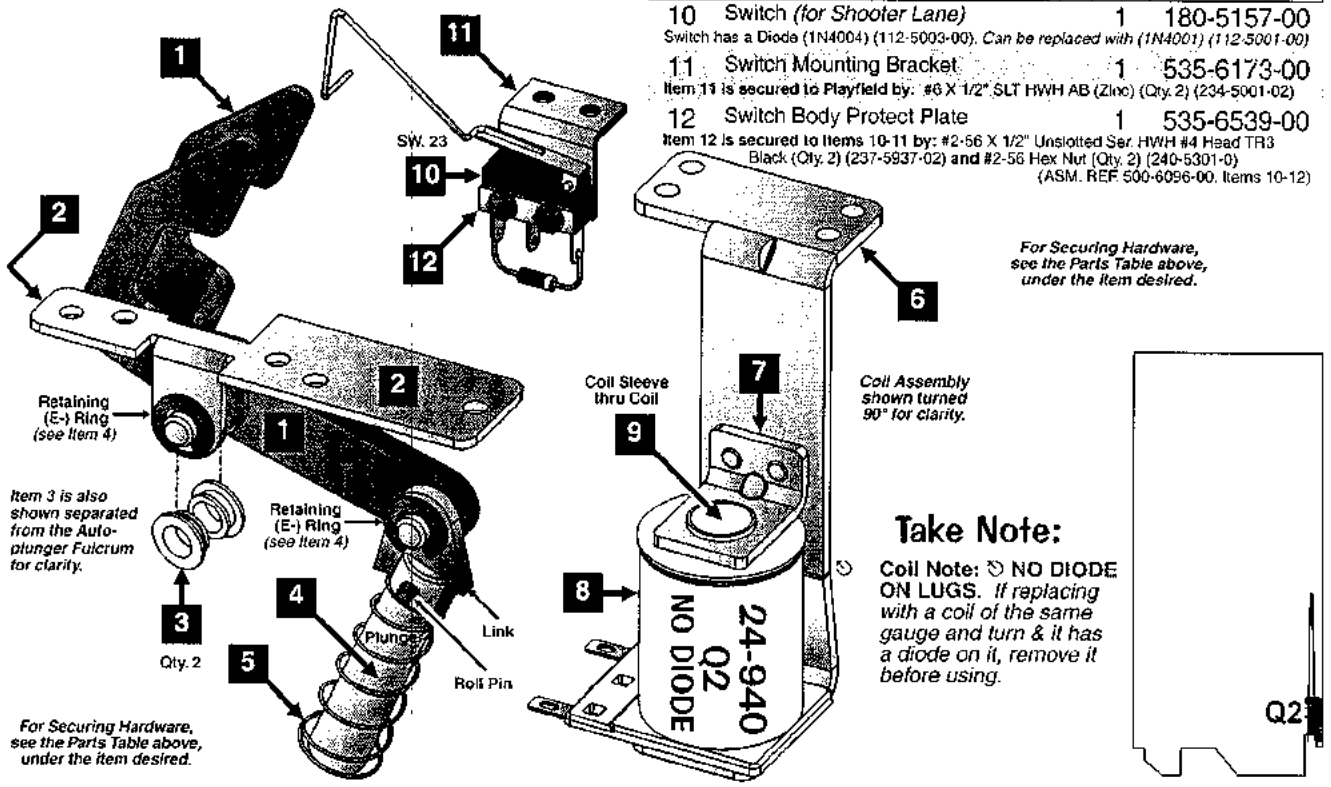

Take Note:

Coil Note: ⍉ NO DIODE ON LUGS. *If replacing with a coil of the same gauge and turn & it has a diode on it, remove it before using.*

4-Ball Trough Assembly, 500-6318-14-ND (Items 1-13)
and Associated Parts: See Parts Table Below.

Ordering Note: Identical to 500-6318-24 with exceptions, see note below Item 13 (Parts Table).

Nr.	4-BALL TROUGH PARTS	QTY.	SPI PART Nr.
1	Ball Trough Outhole Mounting Bracket	1	515-6580-01
	Item 1 is secured below the playfield by: #8 X 1/2" SHWH AB (Zc.) (Qty. 4) (234-5101-00)		
2	Coil Mounting Bracket	1	535-7330-01
	Item 2 is secured to item 1 by: #8-32 X 3/8" HWH Swage (Sr.) Zinc (Qty. 4) (237-5975-00)		
3	Coil Retaining Bracket	1	535-5203-03
	Item 3 is secured to item 2 by: #8-32 X 1/4" SHWH (Serr) Zinc (Qty. 2) (237-5975-04)		
4	Coil, 26-1200 [NO DIODE]	1	090-5044-ND
	COIL DOES NOT REQUIRE A DIODE. SEE ⍉ COIL NOTE BELOW FOR DETAILS.		
5	Coil Sleeve (Short) (Formost #10-7077)	1	545-5076-01
6	Steel & Nylon Plunger Asm (3.57")	1	515-7309-01
7	Compression (Return) Spring	1	266-5020-00
8	Rubber Bumper (Grommet)	1	545-5105-00
9	Micro Switch (Roller Actuator, Lite-Force)	3	180-5119-02
	Item 9 requires: Heat Shrink Tubing 1/8" ø PUI-24 (Qty. 1"/per) (605-5006-00)		
	Switch has a Diode (1N4004) (112-5003-00). *Can be replaced with (1N4001) (112-5001-00).*		
10	Switch Body Protect Plate	3	535-6539-00
11	Not Used Trough Ball Guide Plate	0	535-7801-00
	Item 11 is secured to item 1 by: 1/4" X 5/16" X .144" I.D. Spacer Tap (Qty. 1) (254-5014-03) and #2-56 X 1/2" HWH (Ser) UNS #4HD TH3 BO (Qty. 4) (237-5937-02)		
12	Dual OPTO TRANS Board Assembly	1	515-0173-00
13	Dual OPTO REC Board Assembly	1	515-0174-00
	Items 12 & 13 are secured by: #6-32 X 5/8" HWH Swg (Ser) Zc (Qty. 3/per) (237-5976-04)		
	For individual items use : Dual OPTO Transmitter Board (Qty. 1) (520-5173-00), Dual OPTO Receiver Board (Qty. 1) (520-5174-00), OPTO PCB Tube Spacer (Brass) (Qty 3/per) (530-5308-02) and OPTO PCB Rubber Grommet (Qty. 3/per) (545-5518-00)		

Ordering Note: If 500-6318-14-ND is unavailable, order the individual part(s) actually required. This assembly is identical to 500-6318-24-ND, -15 or -25 except for the quantity of Items 9 & 10 (Qty. 4/per on 5-Ball Trough) and Item 11, required when a Magnet Mech. is used in the game (this game it is NOT required). -ND means no diode on Item 4, Coil, 26-1200.

ASSOCIATED PARTS ARE NOT INCLUDED WITH THE ABOVE ASSEMBLY.

Nr.	ASSOCIATED PART(S)	QTY.	SPI PART Nr.
AP-A	Ball Trough Enter / Exit Scoop	1	535-7329-01
	Item AP-A secured to the playfield by: #8 X 1/2" SHWH AB (Zinc) (Qty. 4) (234-5101-00).		
AP-B	Steel Balls (1-1/16" ø)	4	260-5000-00

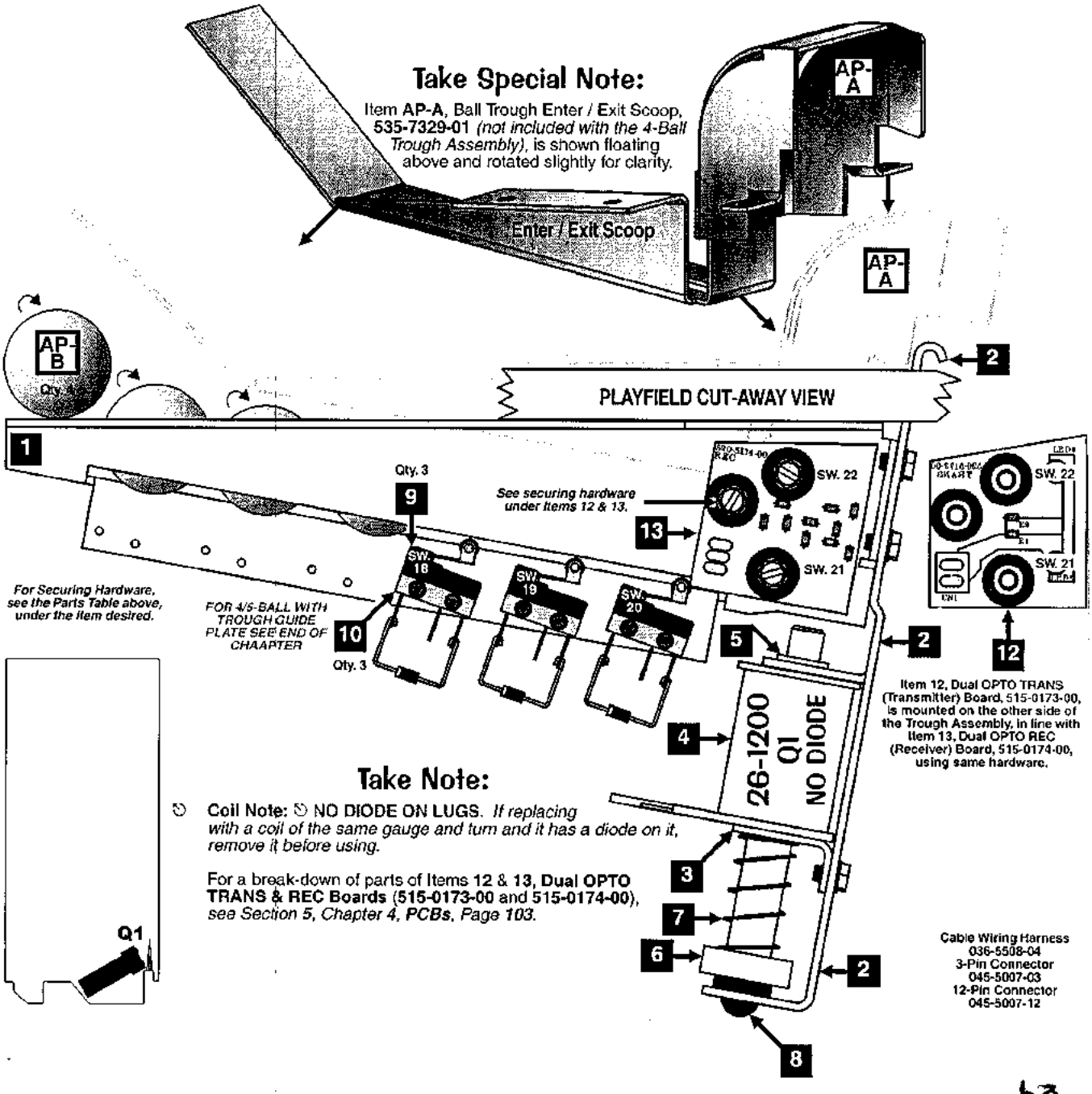

5-Ball ‡ Trough Assembly, 500-6318-25-ND (Items 1-13)
and Associated Parts: See Parts Table Below.

Ordering Note: Identical to 500-6318-15 with exceptions, see note below Item 13 (Parts Table).

Nr.	5-BALL TROUGH PARTS	QTY.	SPI PART Nr.
1	Ball Trough Outhole Mounting Bracket	1	515-6580-01
	Item 1 is secured below the playfield by: #8 X 1/2" SHWH AB (Zc.) (Qty. 4) (234-5101-00)		
2	Coil Mounting Bracket	1	535-7330-01
	Item 2 is secured to Item 1 by: #8-32 X 3/8" HWH Swage (Sr.) Zinc (Qty. 4) (237-5975-00)		
3	Coil Retaining Bracket	1	535-5203-03
	Item 3 is secured to Item 2 by: #8-32 X 1/4" SHWH (Ser) Zinc (Qty. 2) (237-5975-04)		
4	Coil, 26-1200 [NO DIODE]	1	090-5044-ND
	COIL DOES NOT REQUIRE A DIODE. SEE ⟲ COIL NOTE BELOW FOR DETAILS.		
5	Coil Sleeve (Short) (Formost #10-7077)	1	545-5076-01
6	Steel & Nylon Plunger Assembly	1	515-7309-01
7	Compression (Return) Spring	1	266-5020-00
8	Rubber Bumper (Grommet)	1	545-5105-00
9	Micro Switch (Roller Actuator, Life-Force)	4	180-5119-02
	Item 9 requires: Heat Shrink Tubing 1/8" ø PUI-24 (Qty. 1"/per) (605-5006-00). Switch has a Diode (1N4004) (112-5003-00). *Can be replaced with (1N4001) (112-5001-00).*		
10	Switch Body Protect Plate	4	535-6539-00
11	Trough Ball Guide Plate	1	535-7801-00
	Item 11 is secured to Item 1 by: 1/4" X 5/16" X .144" I.D. Spacer Tap (Qty. 1) (254-5014-03) and #2-56 X 1/2" HWH (Ser) UNS #4HD TB3 BO (Qty. 4) (237-5937-02)		
12	Dual OPTO TRANS Board Assembly	1	515-0173-00
13	Dual OPTO REC Board Assembly	1	515-0174-00
	Items 12 & 13 are secured by: #6-32 X 5/8" HWH Swg (Ser) Zc (Qty. 3/per) (237-5976-04). *For individual items use:* Dual OPTO Transmitter Board (Qty. 1) (520-5173-00), Dual OPTO Receiver Board (Qty. 1) (520-5174-00), OPTO PCB Tube Spacer (Brass) (Qty. 3/per) (530-5308-02) and OPTO PCB Rubber Grommet (Qty. 3/per) (545-5518-00).		

Ordering Note: If 500-6318-25-ND is unavailable, order the individual part(s) actually required. This assembly is identical to 500-6318-15-ND, -14 or -24 except for the quantity of Items 9 & 10 (Qty. 4/per on 5-Ball Trough) and Item 11, required when a Magnet Mech. is used in the game (this game it is required). -ND means no diode on Item 4, Coil, 26-1200

ASSOCIATED PARTS ARE NOT INCLUDED WITH THE ABOVE ASSEMBLY.

Nr.	ASSOCIATED PART(S)	QTY.	SPI PART Nr.
AP-A	Ball Trough Enter / Exit Scoop Rev C	1	535-7329-01
	Item AP-A secured to the playfield by: #8 X 1/2" SHWH AB (Zinc) (Qty. 4) (234-5101-00).		
AP-B	‡ Steel Balls (1-1/16" ø)	5	260-5000-00

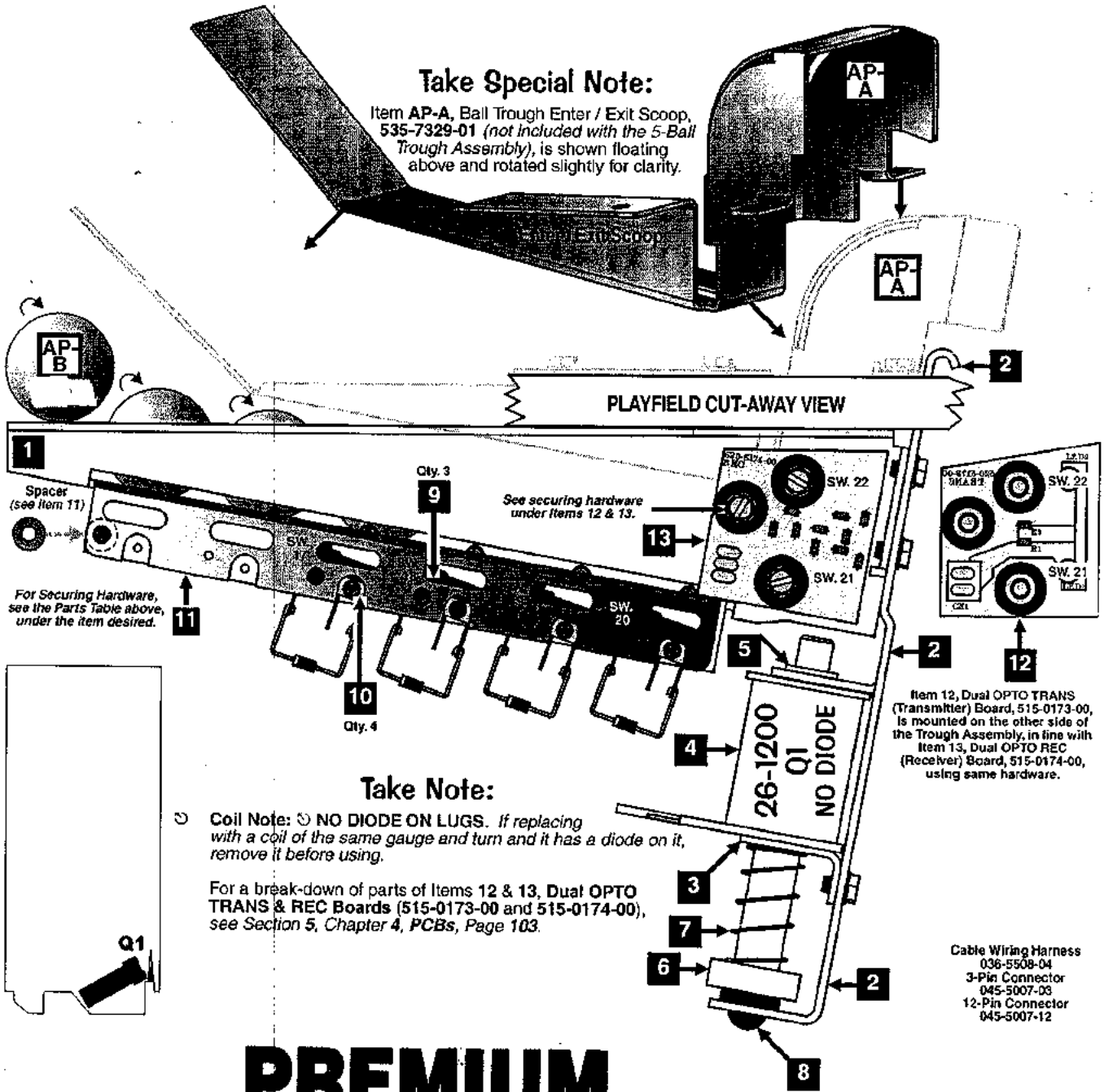

Take Special Note:

Item **AP-A**, Ball Trough Enter / Exit Scoop, **535-7329-01** *(not included with the 5-Ball Trough Assembly)*, is shown floating above and rotated slightly for clarity.

Take Note:

⟲ **Coil Note:** ⟲ **NO DIODE ON LUGS.** *If replacing with a coil of the same gauge and turn and it has a diode on it, remove it before using.*

For a break-down of parts of Items **12 & 13, Dual OPTO TRANS & REC Boards (515-0173-00 and 515-0174-00)**, *see Section 5, Chapter 4, PCBs, Page 103.*

Cable Wiring Harness
036-5508-04
3-Pin Connector
045-5007-03
12-Pin Connector
045-5007-12

PREMIUM

Flipper (Left) Assembly, 500-6543-15-ND (Items 1-15)
and Associated Parts: White Flipper Bat & Shaft Asm., 515-5133-08-06 (Items AP-A / AP-B)

Nr.	FLIPPER (LEFT) PARTS	QTY.	SPI PART Nr.
1	Flipper Base Plate (**LEFT**)	1	*See FRP1*
	Item 1 is secured below by: #8 X 1/2" SHWH AB (Zinc) (Qty. 8) (234-5101-00) *Ordering Note : Individual Part (535-7275-01) is not prethreaded, see Item FRP1.*		
2	Flipper Bat Bushing (White Plastic) .25" ø I.D.	1	545-5070-00
	Item 2 is secured to Item 1 by: #6-32 X 3/8" HWH Swage (Ser.) Zc. (Qty. 3) (237-5976-02)		
3	Power (EOS / End-of-Stroke) Switch	1	180-5149-00
	Item 3 is secured to Item 1 by: #6-32 X 5/8" HWH Swage (Ser.) Zc. (Qty. 2) (237-5976-04)		
4	Sw. Plate/Spring Return Brkt. (**LEFT**)	1	535-7354-**01**
5	Flipper Return Spring	1	265-5035-00
6	Coil Stop Bracket Sub-Assembly	1	515-6308-01
	Item 6 is secured to Item 1 by: #10-32 X 3/8" SHWH Swage (Serr) Zinc (Qty. 2) (237-5985-00) and #10 Split Lock Washer (Qty. 2) (244-5003-00)		
7	Spring Washer (17/32" ID X 3/4" X 1")	1	269-5002-00
8	Coil Support Bracket	1	535-7356-00
	Item 8 is secured to Item 1 by: #6-32 X 3/8" HWH Swage (Ser.) Zc. (Qty. 2) (237-5975-00)		
9	Coil, 23-1500 [NO DIODE] BLUE	1	090-5062-ND
	COIL DOES NOT REQUIRE A DIODE. SEE ↻ COIL NOTE BELOW FOR DETAILS.		
10	Coil Sleeve	1	545-5388-00
11	Deflector Pad (Bumper)	1	545-5428-00
12	Flipper Plunger & Link Sub-Assy.	1	515-6304-03
	For Individual Items use : Flipper Plunger (530-5349-01) and Plunger "Flipper" Link (545-5611-01) and is secured to the Plunger by: Bushing, .16" ø ID X .281" ø OD X .187" (Qty. 1) (530-5532-00) and Spiral Pin ø 5/32" X 3/4" Lg. (Qty. 1) (251-5015-02)		
13	Crank Bar (Pawl)	1	530-5070-02
	Item 13 requires: Bushing, .192" ø ID X .312" ø OD X .193" (Qty. 1) (530-5139-00)		
14®	Switch Actuator (**LEFT**) Sub-Assy.	1	515-7257-**01**
	For Individual Items use : Actuator & Spring Bracket (**LEFT**) (535-9038-**01**) and ® Switch Actuator (White Plastic) (545-5612-00) and is secured to the Bracket by: Rivet, 1/8" ø X 1/4" Lg. (Qty. 1) (249-5003-00)		
15	Set Screw: #10-32 X 3/4" Socket Hd.	2	237-6144-00
	Item 15 requires: #10-32 Nylon Stop Nut (Qty. 1) *Flipper Link Side Only* (240-5203-00) and #10 Split Lock Washer (Qty. 1) *Switch Actuator Side Only* (244-5003-00) *Tool required for Item 15:* 5/32" *or* 4mm Allen Wrench		

Flipper Rebuild Parts for Easier Installation, $ave $:

FRP 1 FLIPPER BASE PLATE KIT (LEFT) : *Includes Item 1 pre-threaded >+< Securing Hardware for Items 2, 3, 6 & 8.* 515-6617-**01**

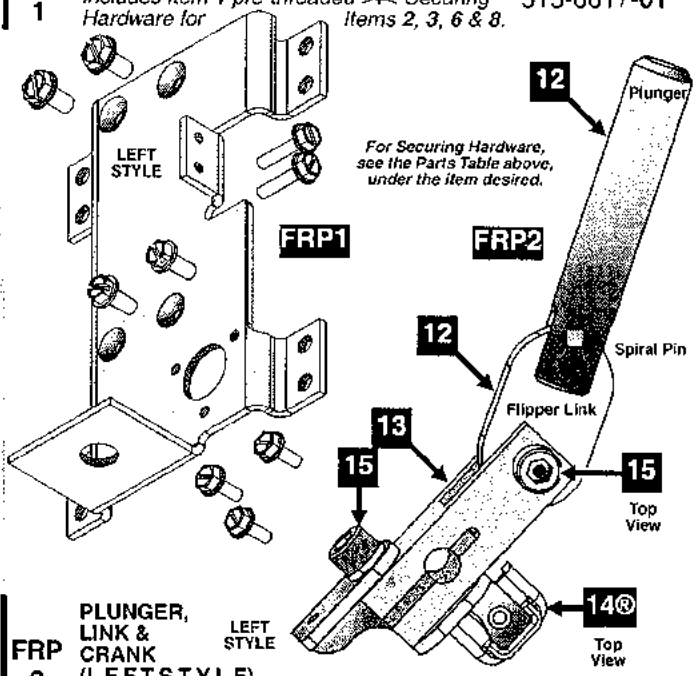

FRP 2 PLUNGER, LINK & CRANK (LEFT STYLE) ASSEMBLY : *Includes Items 12, 13, 14 & 15 (comes assembled).* 515-7203-**01**

FRP 3 FLIPPER (LEFT) REBUILD KIT : *Includes Items 6, 10 AND above FRP2* 500-6307-**10**

Item 14® is also shown separated from Item 13, Crank Bar, for clarity.

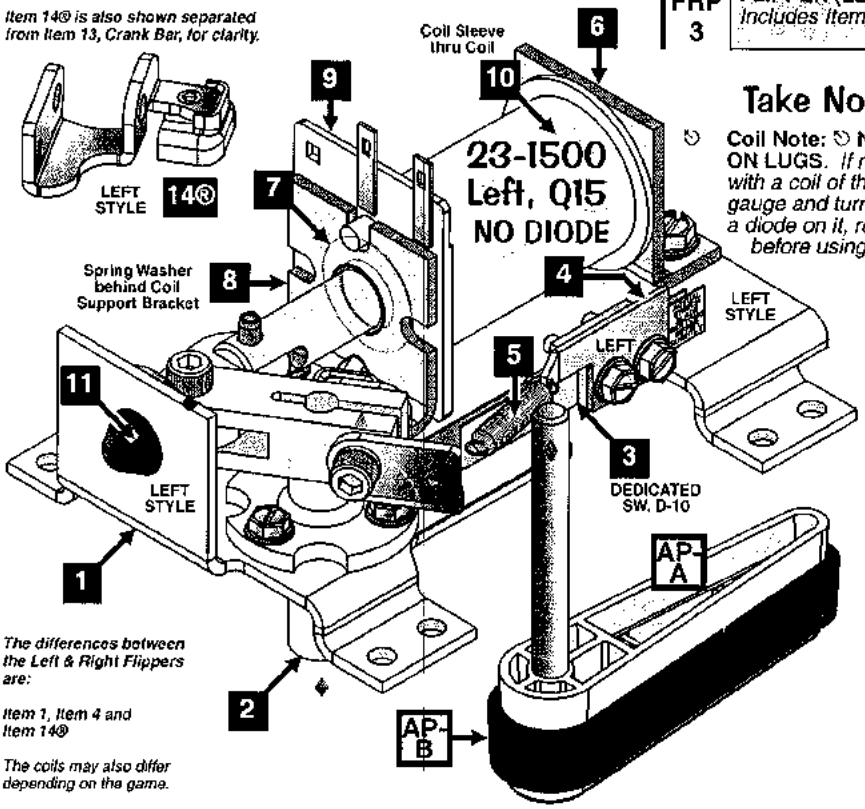

The differences between the Left & Right Flippers are:

Item 1, Item 4 and Item 14®

The coils may also differ depending on the game.

Take Note:

↻ **Coil Note:** ↻ NO DIODE ON LUGS. *If replacing with a coil of the same gauge and turn & it has a diode on it, remove it before using.*

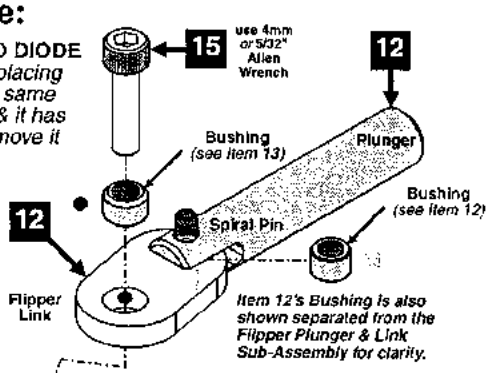

Item 12's Bushing is also shown separated from the Flipper Plunger & Link Sub-Assembly for clarity.

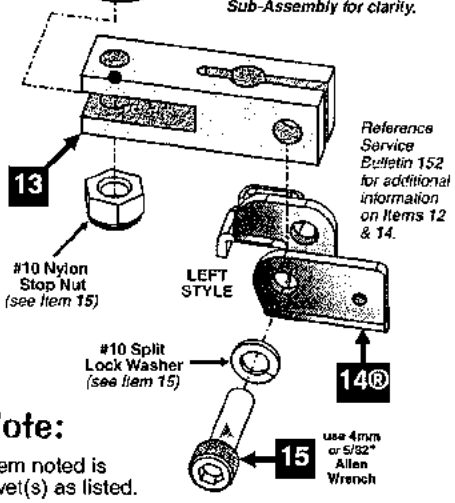

Reference Service Bulletin 152 for additional information on Items 12 & 14.

ASSOCIATED PARTS **ARE NOT INCLUDED** WITH THE ABOVE ASSEMBLY.

Nr.	ASSOCIATED PART(S)	QTY.	SPI PART Nr.
AP-A	**White** Flipper Bat & Shaft Asm. (Non-Knurled End) ***without*** *Rubber Ring*	1	515-5133-**08**-06
AP-B	Large Flipper RED Rubber Ring	1	545-5277-22

Take Note:

® "R" indicates Item noted is secured with rivet(s) as listed.

Flipper (Right) Assembly, 500-6543-05-ND (Items 1-15)
and Associated Parts: Yellow Flipper Bat & Shaft Asm., 515-5133-06-06 (Items AP-A / AP-B)

Nr.	FLIPPER (RIGHT) PARTS	QTY.	SPI PART Nr.
1	Flipper Base Plate (**RIGHT**)	1	*See FRP1*
	Item 1 is secured below by: #8 X 1/2" SHWH AB (Zinc) (Qty. 8) (234-5101-00) *Ordering Note : Individual Part (535-7275-00) is not prethreaded. see item FRP1.*		
2	Flipper Bat Bushing (White Plastic) .25" ø I.D.	1	545-5070-00
	Item 2 is secured to Item 1 by: #6-32 X 3/8" HWH Swage (Ser.) Zc. (Qty. 3) (237-5976-02)		
3	Power (EOS / End-of-Stroke) Switch	1	180-5149-00
	Item 3 is secured to Item 1 by: #6-32 X 5/8" HWH Swage (Ser.) Zc. (Qty. 2) (237-5976-04)		
4	Sw. Plate/Spring Return Brkt. (**RIGHT**)	1	535-7354-**00**
5	Flipper Return Spring	1	265-5035-00
6	Coil Stop Bracket Sub-Assembly	1	515-6308-01
	Item 6 is secured to Item 1 by: #10-32 X 3/8" SHWH Swage (Ser) Zinc (Qty. 2) (237-5985-00) and #10 Split Lock Washer (Qty. 2) (244-5003-00)		
7	Spring Washer (17/32" ID X 3/4" X 1")	1	269-5002-00
8	Coil Support Bracket	1	535-7356-00
	Item 8 is secured to Item 1 by: #8-32 X 3/8" HWH Swage (Ser.) Zc. (Qty. 2) (237-5975-00)		
9	Coil, 22-1080 [NO DIODE] BLUE	1	090-5032-ND
	COIL DOES NOT REQUIRE A DIODE. SEE ↻ COIL NOTE PREV. PAGE FOR DETAILS.		
10	Coil Sleeve	1	545-5388-00
11	Deflector Pad (Bumper)	1	545-5428-00
12	Flipper Plunger & Link Sub-Assy.	1	515-6304-03
	For Individual Items use : Flipper Plunger (530-5349-01) and Plunger "Flipper" Link (545-5611-01) and is secured to the Plunger by: Bushing, .16" ø ID X .281" ø OD X .187" (Qty. 1) (530-5532-00) and Spiral Pin ø 5/32" X 3/4" Lg. (Qty. 1) (251-5015-02)		
13	Crank Bar (Pawl)	1	530-5070-02
	Item 13 requires: Bushing, .192" ø ID X .312" ø OD X .195" (Qty. 1) (530-5139-00)		
14®	Switch Actuator (**RIGHT**) Sub-Assy.	1	515-7257-**00**
	For Individual Items use : Actuator & Spring Bracket (**LEFT**) (535-9038-01) and ® Switch Actuator (White Plastic) (545-5612-00) and is secured to the Bracket by: Rivet, 1/8" ø X 1/4" Lg. (Qty. 1) (249-5003-00)		
15	Set Screw: #10-32 X 3/4" Socket Hd.	2	237-6144-00
	Item 15 requires: #10-32 Nylon Stop Nut (Qty. 1) *Flipper Link Side Only* (240-5203-00) and #10 Split Lock Washer (Qty. 1) *Switch Actuator Side Only* (244-5003-00) *Tool required for Item 15:* 5/32" *or* 4mm Allen Wrench		

Flipper Rebuild Parts for Easier Installation, $ave $:

FRP 1 FLIPPER BASE PLATE KIT (**RIGHT**): *Includes Item 1 pre-threaded >+< Securing Hardware for Items 2, 3, 6 & 8.* — 515-6617-00

FRP 2 PLUNGER, LINK & CRANK (**RIGHT STYLE**) ASSEMBLY: *Includes Items 12, 13, 14 & 15 (comes assembled).* — 515-7203-00

FRP 3 FLIPPER (RIGHT) REBUILD KIT: *Includes Items 6, 10 AND above FRP2* — 500-6307-00

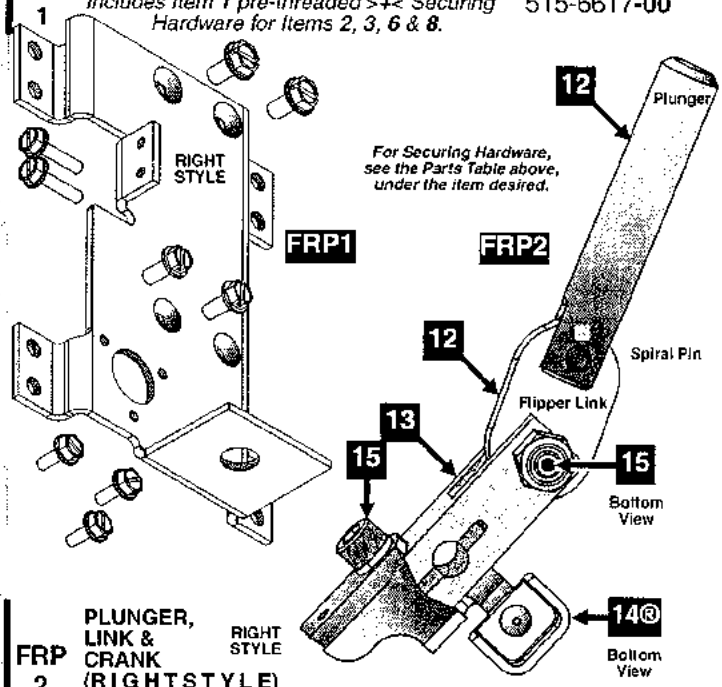

Item 14® is also shown separated from Item 13, Crank Bar, for clarity.

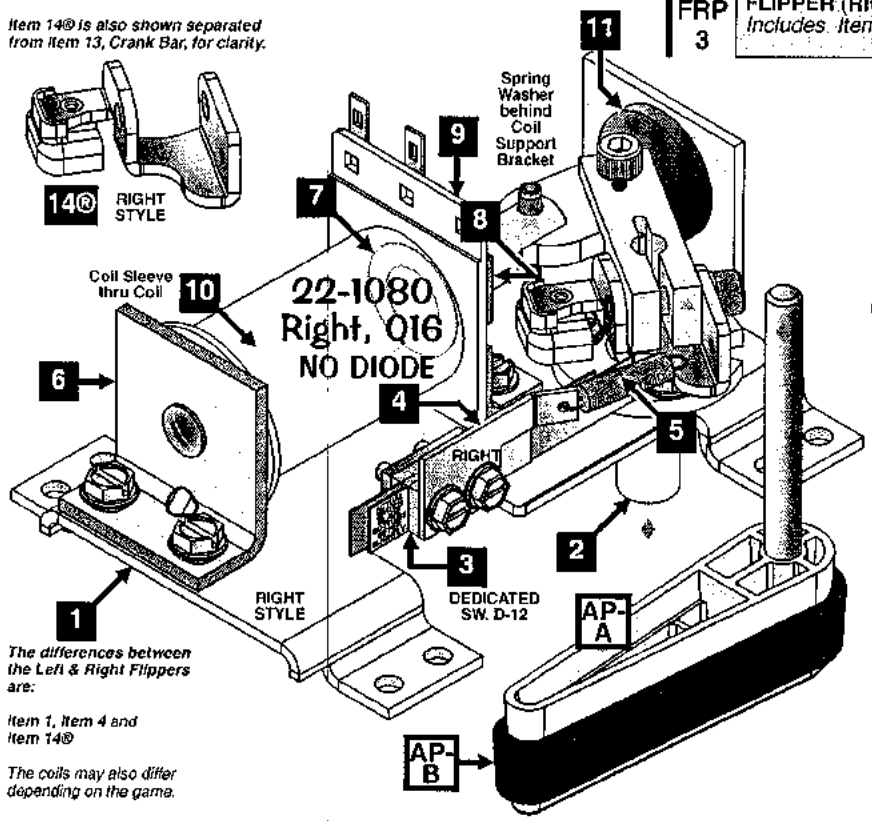

The differences between the Left & Right Flippers are:

Item 1, Item 4 and Item 14®

The coils may also differ depending on the game.

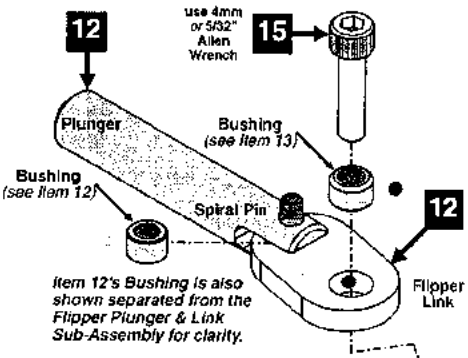

Item 12's Bushing is also shown separated from the Flipper Plunger & Link Sub-Assembly for clarity.

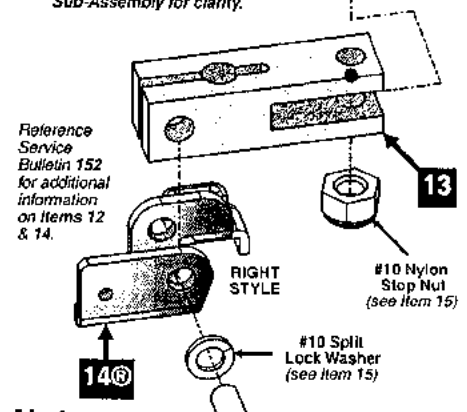

ASSOCIATED PARTS ARE NOT INCLUDED WITH THE ABOVE ASSEMBLY.

Nr.	ASSOCIATED PART(S)	QTY.	SPI PART Nr.
AP-A	YELLOW Flipper Bat & Shaft Asm. (Non-Knurled End) *without Rubber Ring*	1	515-5133-**06**-06
AP-B	Large Flipper **RED** Rubber Ring	1	545-5277-**22**

Take Note:

® "R" Indicates Item noted is secured with rivet(s) as listed.

ITEM NO.	PART NUMBER	DESCRIPTION	QTY.
1	515-6840-00	UP POST BRACKET WELDMENT	1
2	090-5030-ND	COIL - 23-1100 - NO DIODE	1
3	545-5847-00	COIL SLEEVE	1
4	535-7356-00	COIL BRACKET	2
5	515-6844-01	ASSEMBLY, UP POST SHAFT & CAP	1
6	280-5014-00	ADJUSTABLE BUMPER/STOP	1
7	237-5975-00	SCREW, 8-32 X 3/8 HWH SWAGE ZN	6
8	269-5002-00	SPRING WASHER	1
9	266-5022-01	COMPRESSION SPRING	1
10	240-5208-00	10-32 KEPS NUT	1
11	535-8303-00	ADJUSTMENT BRACKET, UP POST	1
12	530-5511-00	PLUNGER HEAD	1
13	232-5401-00	SCREW, 10-32 X 3/8 PPH SEMS	1

UP POST ASSEMBLY

500-6293-01

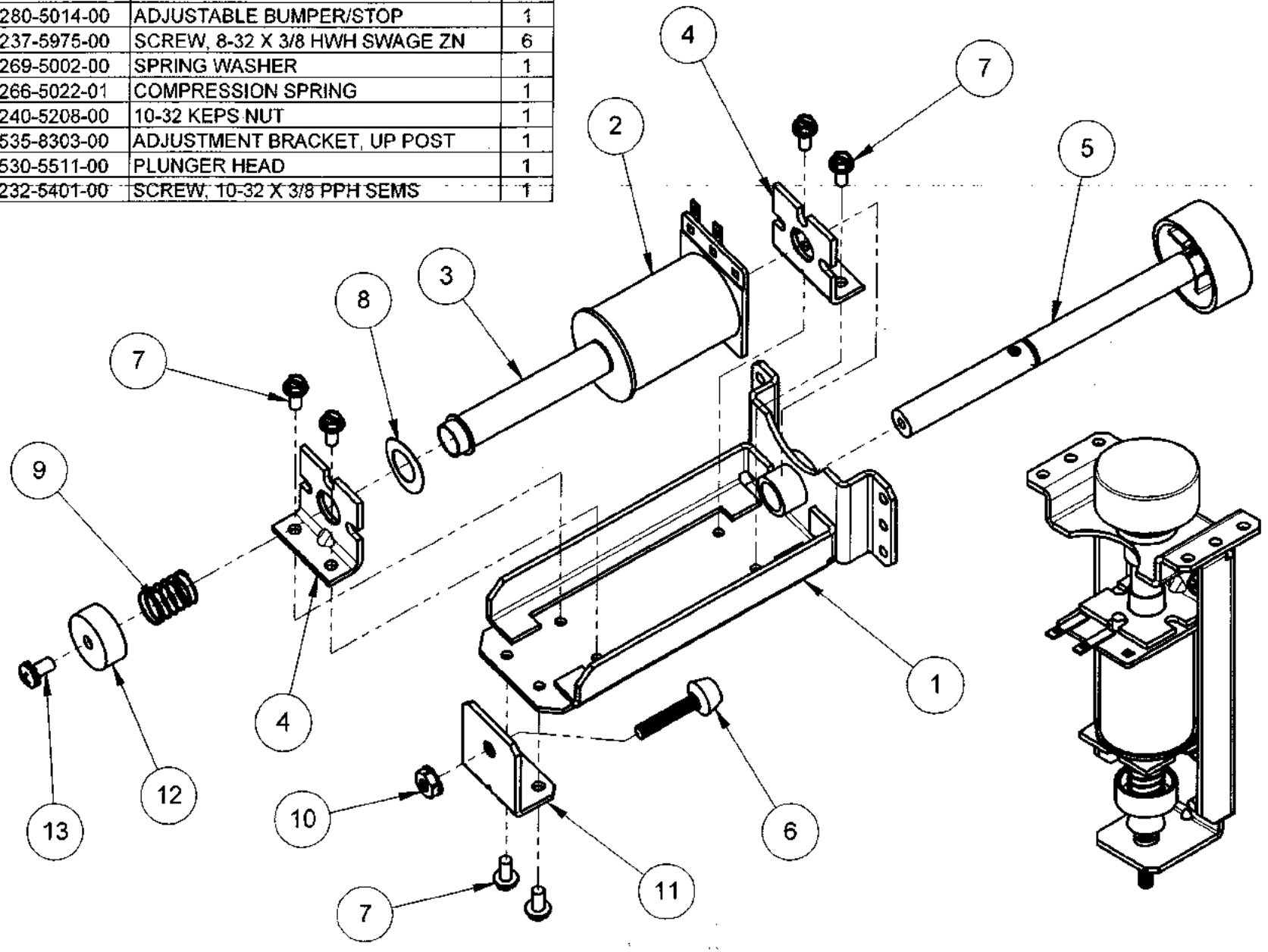

PREMIUM

Ball Deflector Assembly, 500-7081-00 (Items 1-7)

ITEM #	QTY	PART #	DESCRIPTION
1	1	535-9248-00	BRACKET
2	2	535-5203-03	COIL RETAINING BRACKET
3	1	090-5044-ND	COIL 26-1200 - NO DIODE
4	1	545-5847-00	COIL SLEEVE
7	1	280-5014-00	ADJUSTABLE BUMPER/STOP
5	1	515-7653-00	PLUNGER ASSEMBLY
6	1	266-5022-00	COMPRESSION SPRING-CONICAL
(2)	4	232-5300-00	SCREW, 8-32 X 1/4" PPH SEMS
(7)	1	240-5208-00	#10-32 KEPS NUT

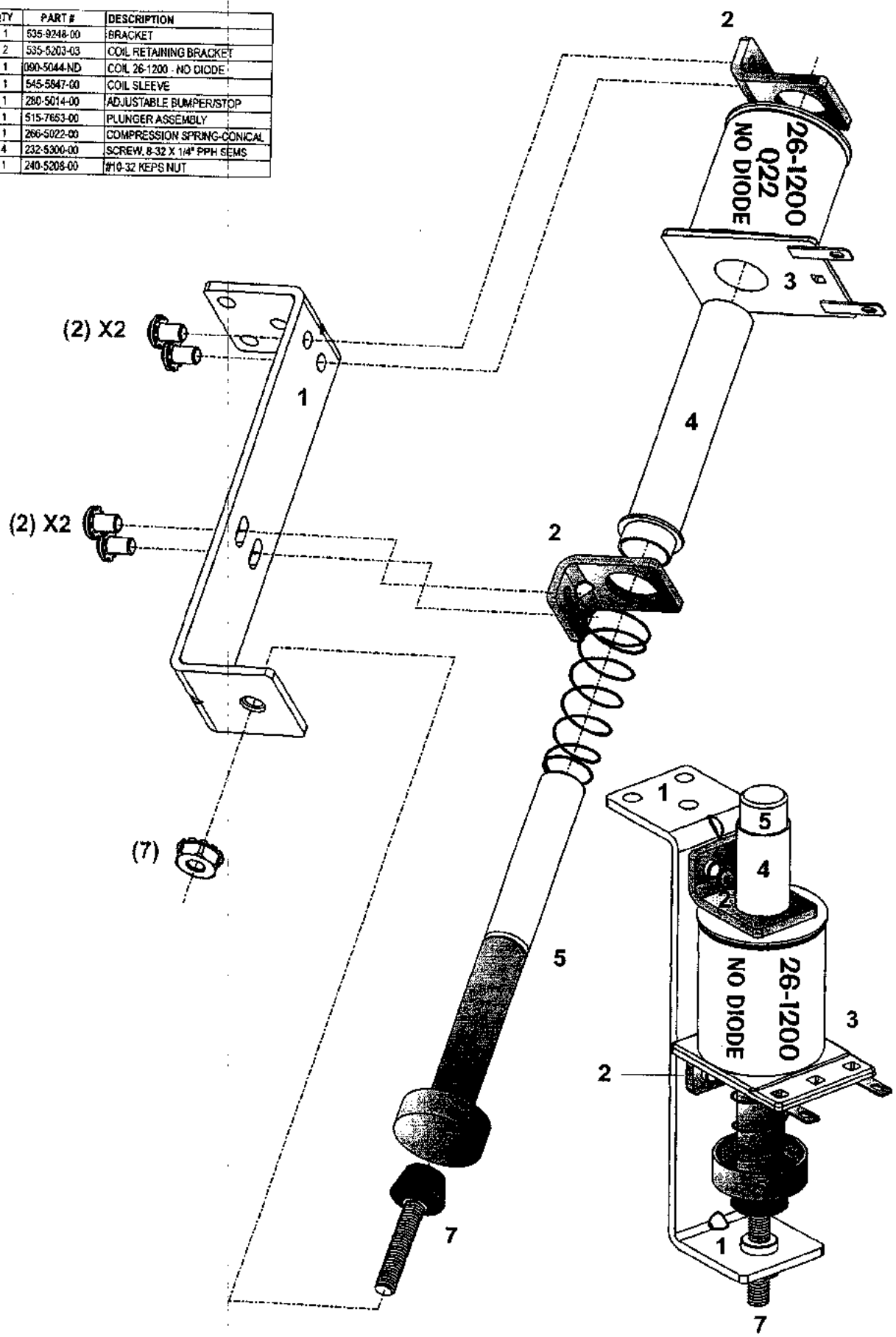

PREMIUM

Slingshot (Left & Right) Assemblies, 500-5849-00-ND (Qty. 2) (Items 1-9)

Nr.	SLINGSHOT PARTS	QTY.	SPI PART Nr.
1	Slingshot Bracket Assembly	1/per	515-5339-01
	Item 1 is secured below the playfield by: #8 X 1/2" SHWH AB (Zc) (Qty 3) (234-5101-00)		
2	Coil Retaining Bracket	1/per	535-5203-03
	Item 2 is secured to Item 1 by: #8-32 X 3/8" PPH MS (Sems) (Qty 2) (232-5301-00)		
3	Coil, 24-910 [NO DIODE]	1/per	090-5044-ND
	COIL DOES NOT REQUIRE A DIODE. SEE ⍉ COIL NOTE BELOW FOR DETAILS.		
4	Coil Sleeve	1/per	545-5031-00
5	Plunger & Link Assembly	1/per	515-5338-00
	For Individual Items use : Plunger 2" Lg. (530-5025-01), Plunger Link (545-5293-00) and Roll Pin 1/8" ø x 5/8" Lg. (251-5008-00) **The Plunger Link is secured to the Riveted Arm by:** Retaining Ring, 1/4" ø Shaft (Qty. 1) (270-5002-00)		
	Ordering Note: If 515-5338-00 is unavailable, order the individual part(s) actually required.		

Nr.	SLINGSHOT PARTS	QTY.	SPI PART Nr.
6	Compression (Return) Spring	1/per	266-5020-00
7	Slingshot Stack (Blade) Switch	2/per	180-5054-00
	Only 1 of the 2 Switches has a Diode (1N4004) (112-5003-00). *See Note Below on Drawing. Can be replaced with (1N4001) (112-5001-00).*		
8	Switch Body Protect Plate	2/per	535-5045-00
	Items 7 & 8 are secured to Item 1 by: #6-32 X 5/8" HWH Swage (Qty. 4) (237-5976-04)		
9®	Riveted Arm & Tip Assembly	1/per	515-5340-01
	For Individual Parts use (requires drilling out rivet & rereviting) : Arm (515-5341-01), Kicker Tip (545-5216-01) and Rivet, 1/8" ø x 1/4" Lg. (249-5003-00) **The Riv. Arm is secured to Item 1 by:** Retaining Ring, 1/4" ø Shaft (Qty. 1) (270-5002-00)		
	Ordering Note: If 515-5340-01 is unavailable, order the individual part(s) actually required.		
	Ordering Note: If 500-5849-00-ND is unavailable, order the individual part(s) actually required. This assembly is identical to 500-5849-02-ND with the exception of Item 3, which uses a Coil, 27-1500 [NO DIODE] (090-5004-ND) instead.		

Take Note:

⍉ **Coil Note: ⍉ NO DIODE ON LUGS.** *If replacing with a coil of the same gauge and turn and it has a diode on it, remove it before using.*

® "R" indicates Item noted is secured with rivet(s) as listed.

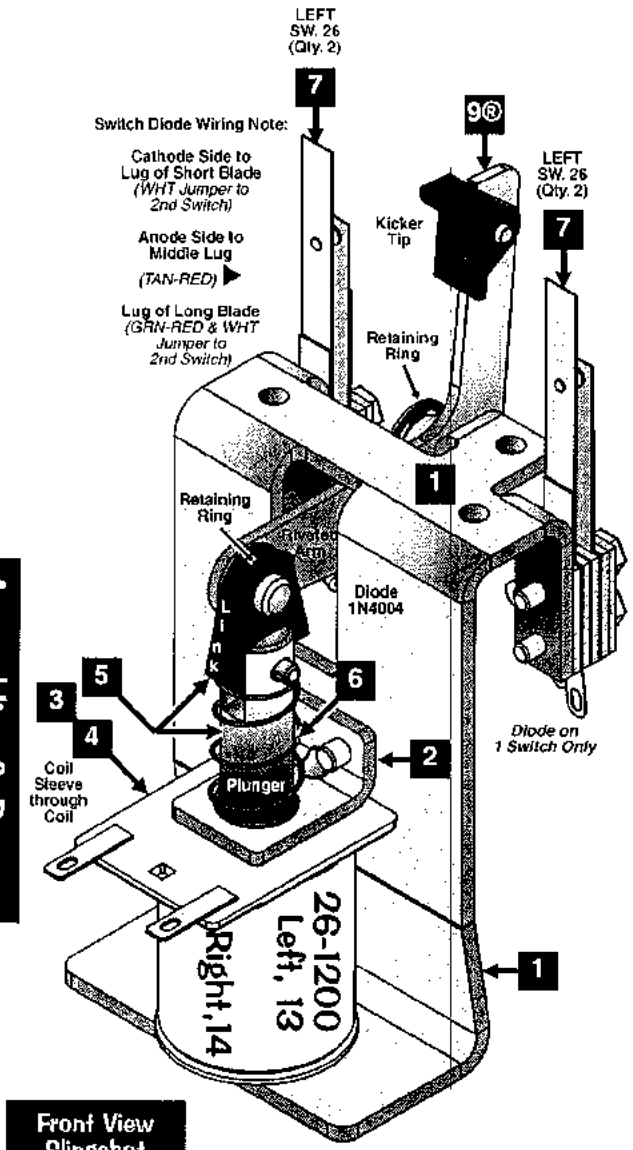

Front View Slingshot (Left)

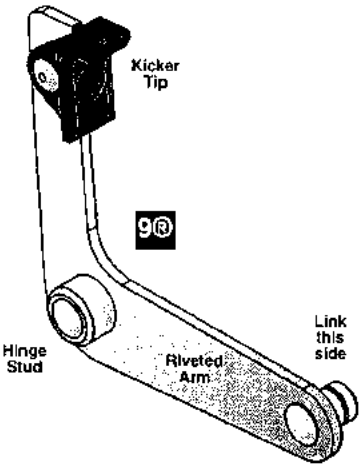

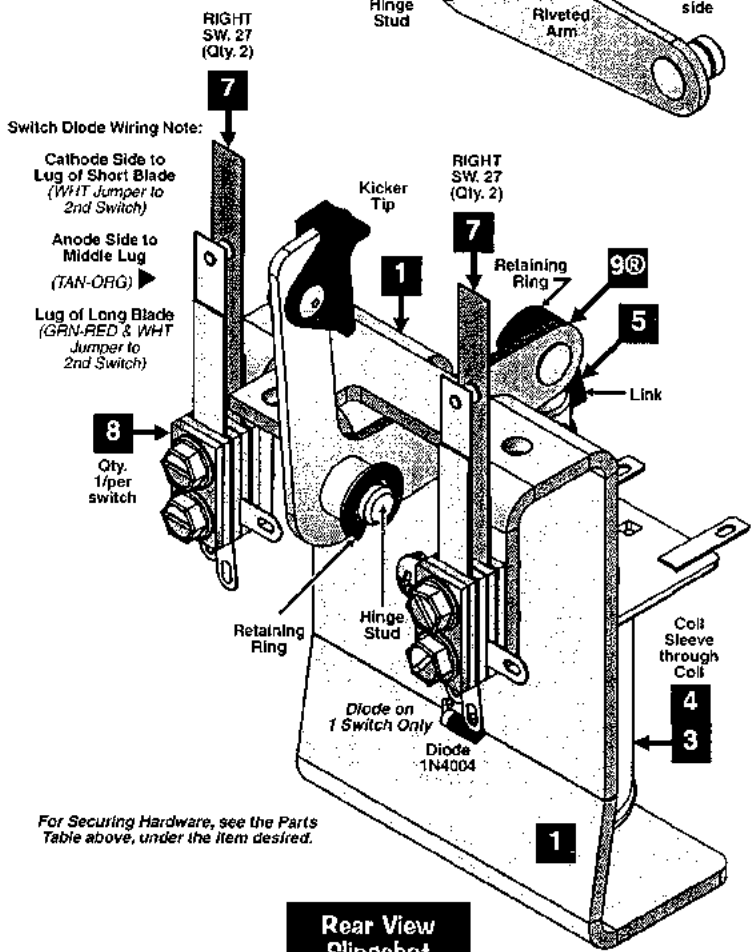

For Securing Hardware, see the Parts Table above, under the item desired.

Rear View Slingshot (Right)

ITEM NO.	PART NUMBER	DESCRIPTION	QTY.
1	530-5266-01	MAGNET CORE	1
2	090-5042-00	MAGNET, 22-650 COIL	1
3	535-6637-01	MAGNET BRACKET	1
4	232-5201-00	SCREW, 6-32 X 3/8" PPH MS SEMS	1

PREMIUM

B10

ITEM NO.	PART NUMBER	DESCRIPTION	QTY.
1	510-5129-00	TARGET BLADE, RS MICK MECH	1
2	510-5136-00	TARGET SWITCH, RS, MICK MECH	1
3	626-5078-00	3/16" FOAM PAD	1
4	D36-5565-09-B8	CABLE, TARGET, RS MICK MECH	1
5	545-6632-00	FISCHE PAPER, RS, MICK MECH	1
6	830-6130-29	MICK MECH, RS, PLASTIC	1
7	830-6130-20	PLASTIC RS, -20	1
8	240-5005-00	6-32 NYLOK STOP NUT	2
9	237-5505-00	SCREW, 6-32 X 7/8" PPH MS	2
10	242-5079-00	.150 I.D. X .312 O.D. X .050 THICK WHITE TEFLON WASHER	2

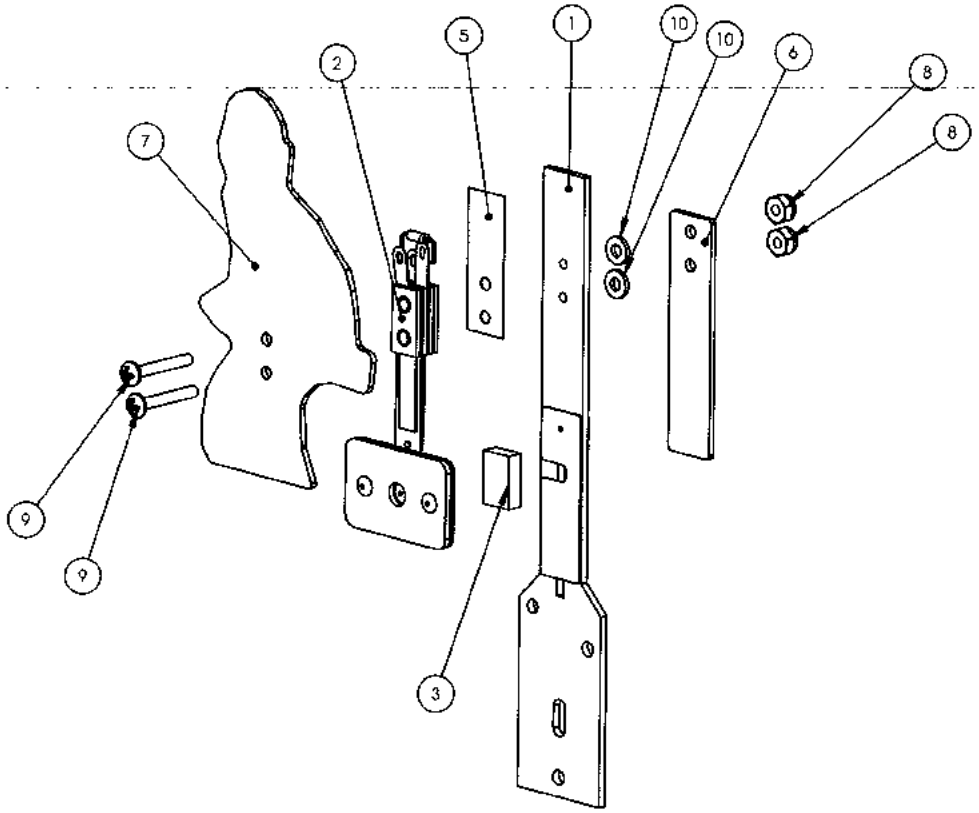

Target Assy, RS Album Mech

511-6896-00

ITEM NO.	PART NUMBER	DESCRIPTION	QTY.
1	180-5207-00	TARGET SWITCH - RADIUSED ANTI-LOFT - STRAIGHT LUGS	1
2	249-5001-00	RIVET - 1/8 X 3/16	1
3	242-5017-00	WASHER, 9/64 ID X 5/16 OD X 1/32	3
4	112-5003-00	DIODE - 1N4004	1
5	545-5145-02-RW	RS TARGET, MICK MECH	1
6	830-6130-28	MICK MECH TARGET PLASTIC	1
7	249-5003-00	RIVET - 1/8 X 1/4	2

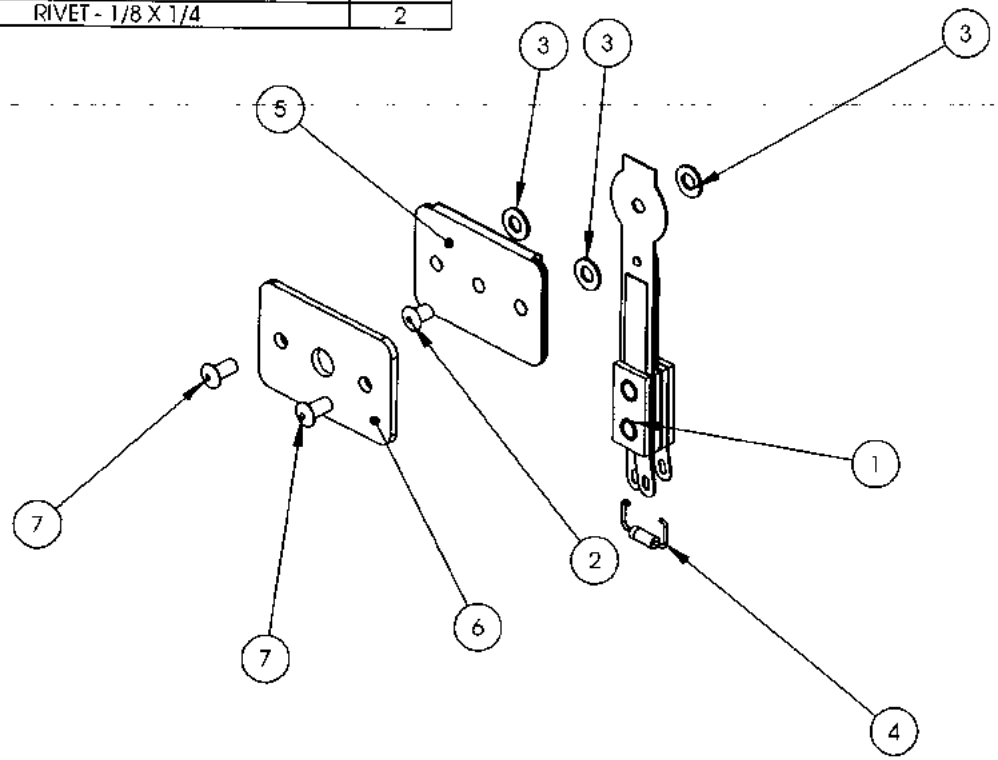

TARGET SWITCH, RS, MICK MECH

510-5136-00

ITEM NO.	PART NUMBER	DESCRIPTION	QTY.
1	535-0432-00	TARGET ARM, RS, MICK MECH	1
2	535-5340-00	TARGET FLAP, RS MICK MECH	2
3	249-5001-00	RIVET - 1/8 X 3/16	1

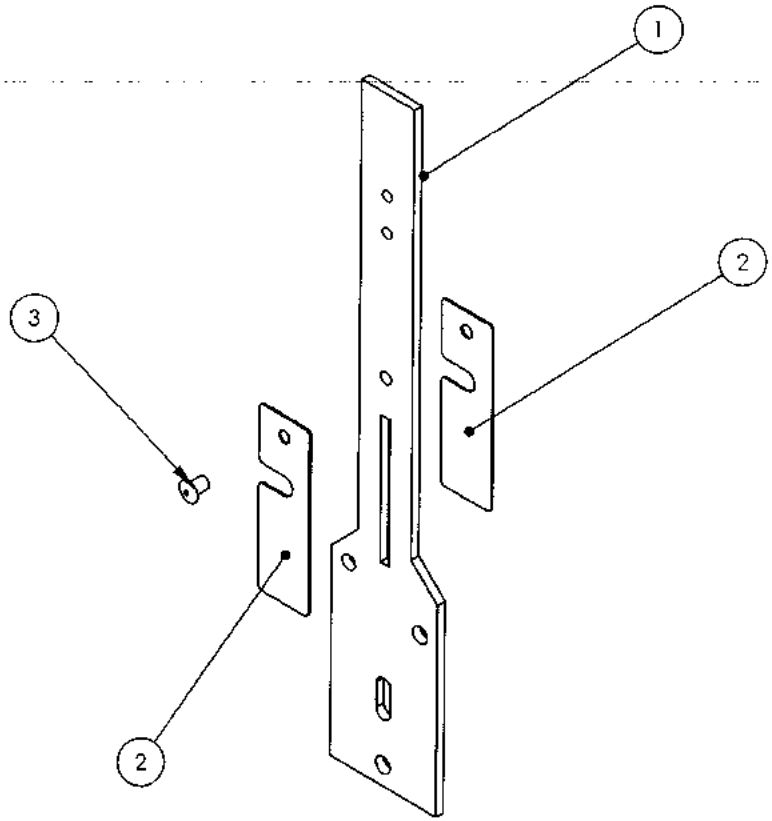

TARGET BLADE, RS MICK MECH

510-5129-00

ITEM NO.	PART NUMBER	DESCRIPTION	QTY.
1	515-7752-00	Target Rest Brkt, RS Album Mech	1
2	511-6895-00	Opto Plate Assy, RS Album Mech	1
3	254-5008-04	HEX SPACER - 3/4"	3
4	240-5102-00	8-32 NYLON LOCK NUT	1
5	232-5201-00	SCREW, 6-32 X 3/8" PPH MS SEMS	7
6	036-5565-07-B8	CABLE W/ 4 SOCKETS, RS, MICK MECH	1
7	237-5945-00	SCREW, 4-40 X 5/8" HWH	4
8	830-6130-22	WIRE GUARD, RS, MICK MECH	1
9	511-6915-01	SAFTEY SWITCH ASSY - RIGHT	1
10	511-6915-00	SAFTEY SWITCH ASSY - LEFT	1
11	545-5760-18	5/16 SNAP-ON SOCKET BRKT	4
12	515-7764-00	BRKT, SAFETY SW, MICK MECH, RS	2
13	254-5064-00	HS_.250, F-F, 8-32	3
14	232-5301-00	SCREW, 8-32 X 3/8" PPH SEMS	3

ASSEMBLY NOTE:

WIRE GUARD ITEM 8 WILL NEED TO BE REMOVED TO ATTACH THIS ASSEMBLY TO THE BOTTOM PLAYFIELD; DO NOT TIGHTEN 8-32 X 3/8 SCREWS ITEM 14 UNTIL ASSEMBLY HAS BEEN SECURED TO THE PLAYFIELD.

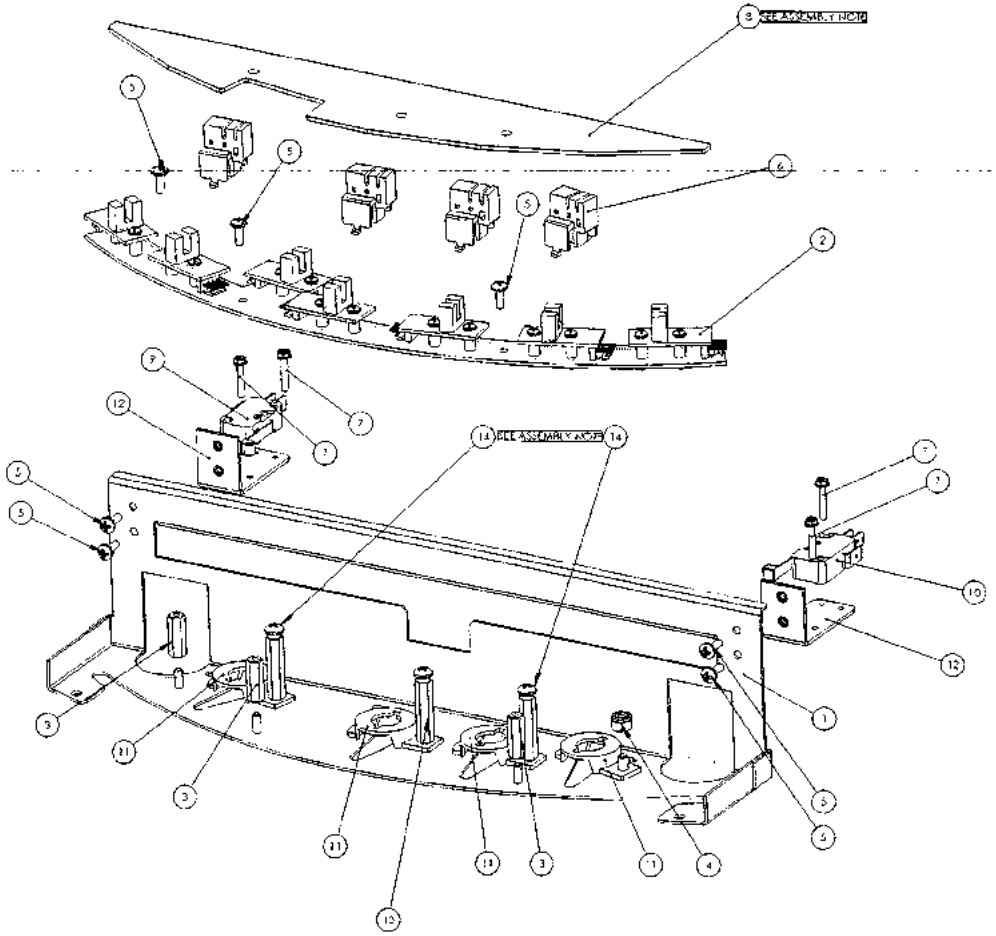

Target Rest, RS Album Mech

511-6894-00

ITEM NO.	PART NUMBER	DESCRIPTION	QTY.
1	535-0431-00	Opto Plate, RS Album Mech	1
2	520-5292-00	OPTO INTERRUPTOR BOARD - IDLER DISC	7
3	254-5062-05	SPACER, #4 ID, 3/16" OD X .312"	14
4	237-5832-00	SCREW, 4-40 X 5/8" PPH SEMS	14

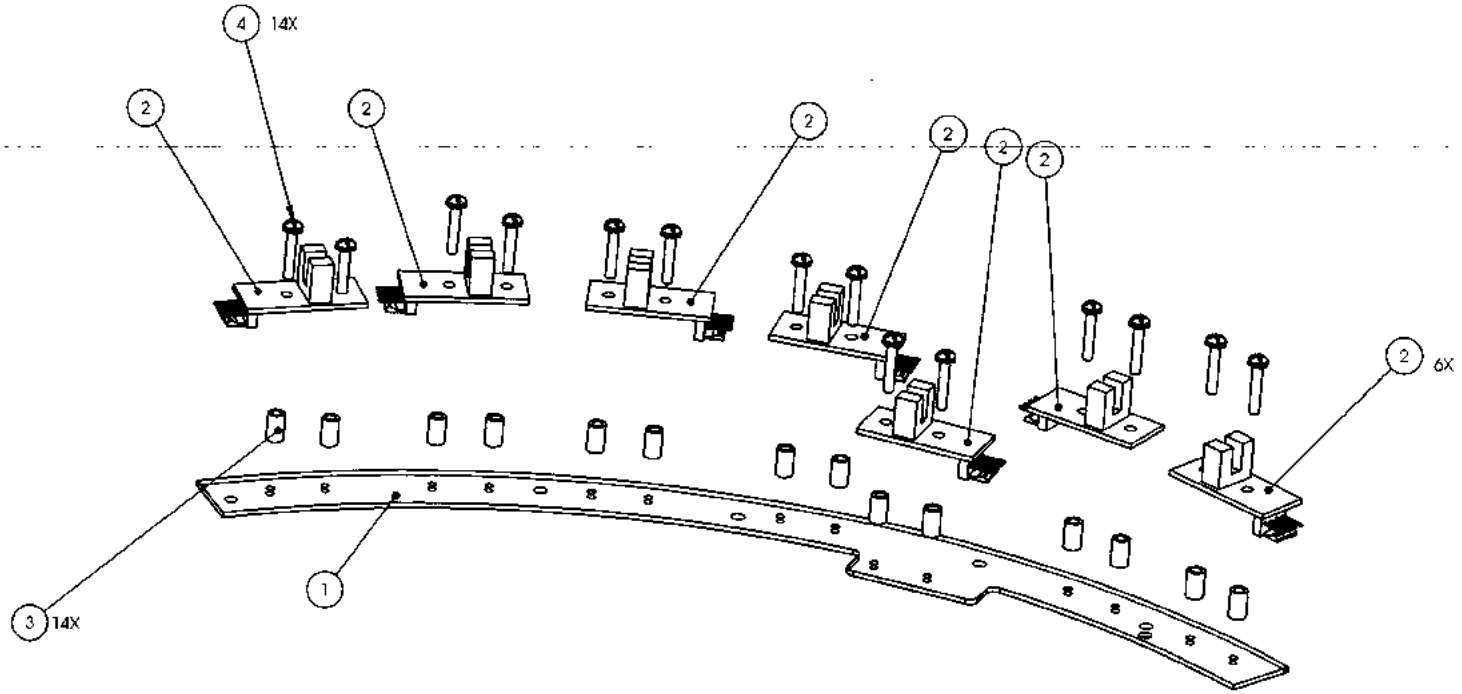

Opto Plate Assy, RS Album Mech

511-6895-00

ITEM #	QTY	PART #	DESCRIPTION
1	1	535-0420-00	Motor Brkt, RS Album Mech
2	1	511-6897-00	MOTOR MECH, RS MICK MECH
3	4	232-5406-00	SCREW, 10-32 X 1" PPH SEMS
4	2	240-5102-00	8-32 NYLON LOCK NUT
5	1	530-6571-00	ARM LOCATOR SHAFT
6	1	511-6917-00	TOP PLATE, MOTOR ASSY, MM, RS
7	1	511-6916-00	ARM ASSY, MM, RS
8	4	242-5003-00	7/32 ID X .50 OD X .062 WASHER

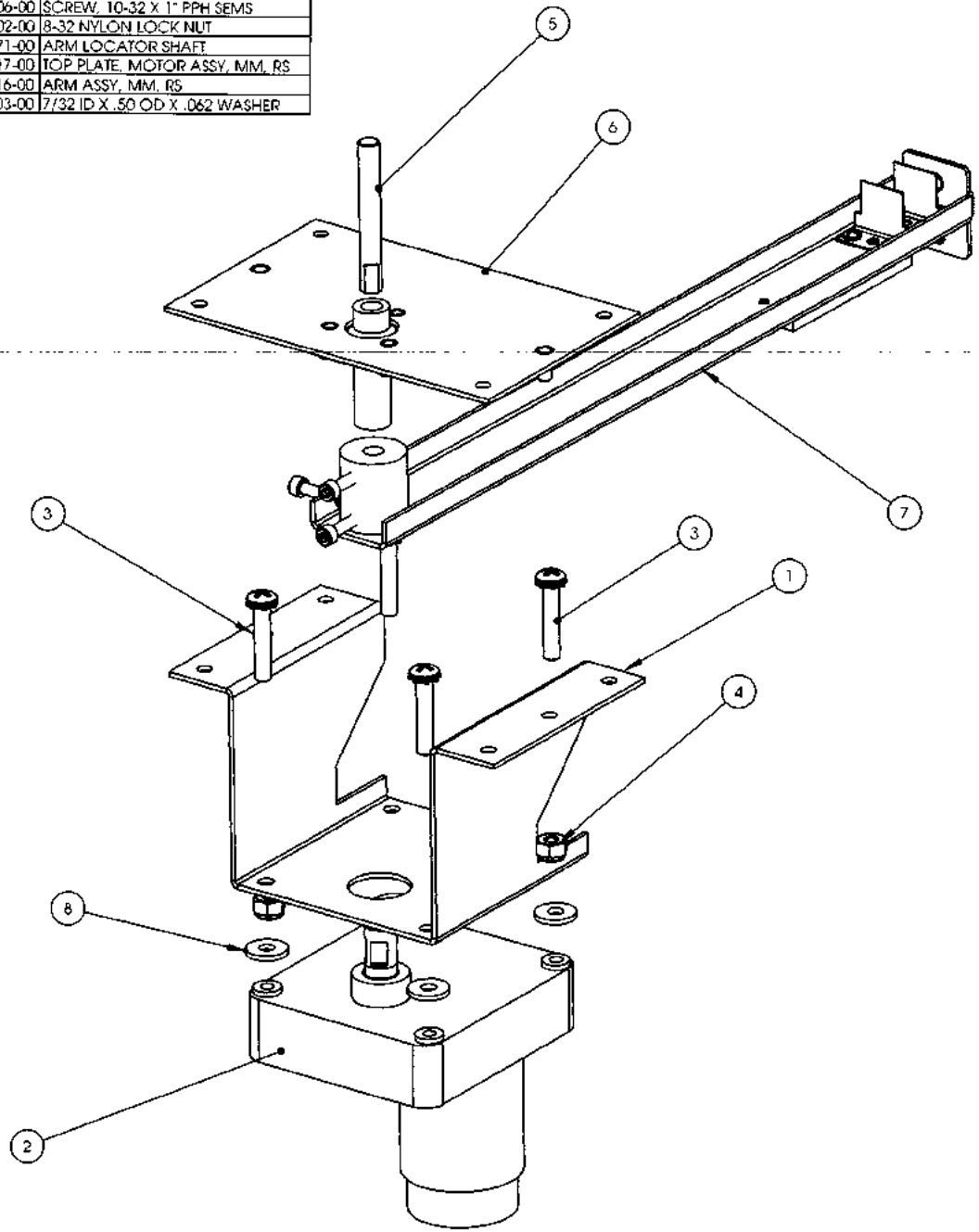

Arm Assy, RS Album

511-6893-00

ITEM NO.	PART NUMBER	DESCRIPTION	QTY.
1	515-7754-00	Top Plate Motor Brkt, RS Album Mech	1
2	240-5005-00	6-32 NYLOK STOP NUT	3
3	545-5070-00	FLIPPER BUSHING	1

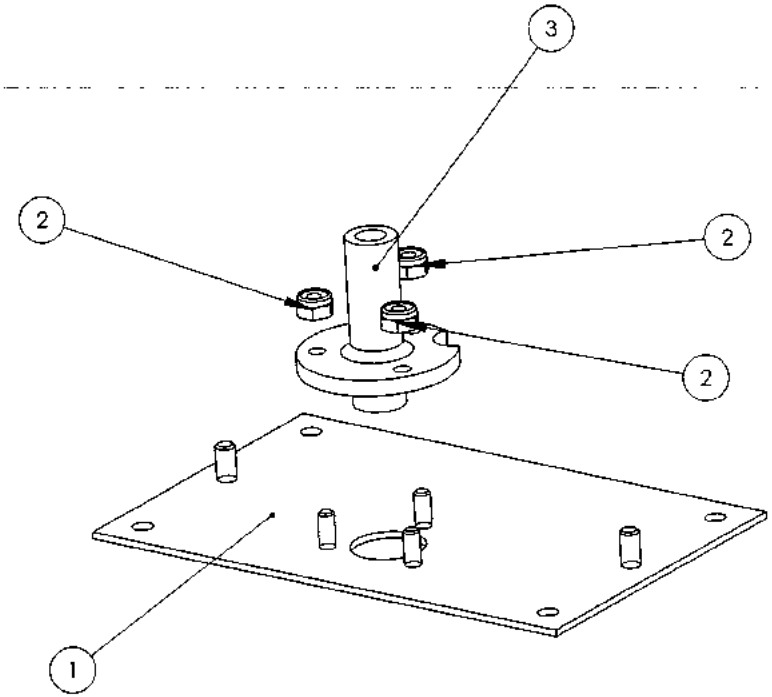

TOP PLATE, MOTOR ASSY, MM, RS

511-6917-00

ITEM NO.	PART NUMBER	DESCRIPTION	QTY.
1	515-7755-00	Arm, RS Album Mech	1
2	535-0424-00	SLIDE PLATE, RS, MICK MECH	1
3	535-0423-00	Opto Flag, RS Album Mech	2
4	237-5982-00	SHCS 6-32 X .50", ZINC	3
5	237-5909-00	SCREW, 4-40 X 1/4" PPH SEMS	6
6	820-6590-00	DECAL - WARNING - TARGET ARM - R.S.	1

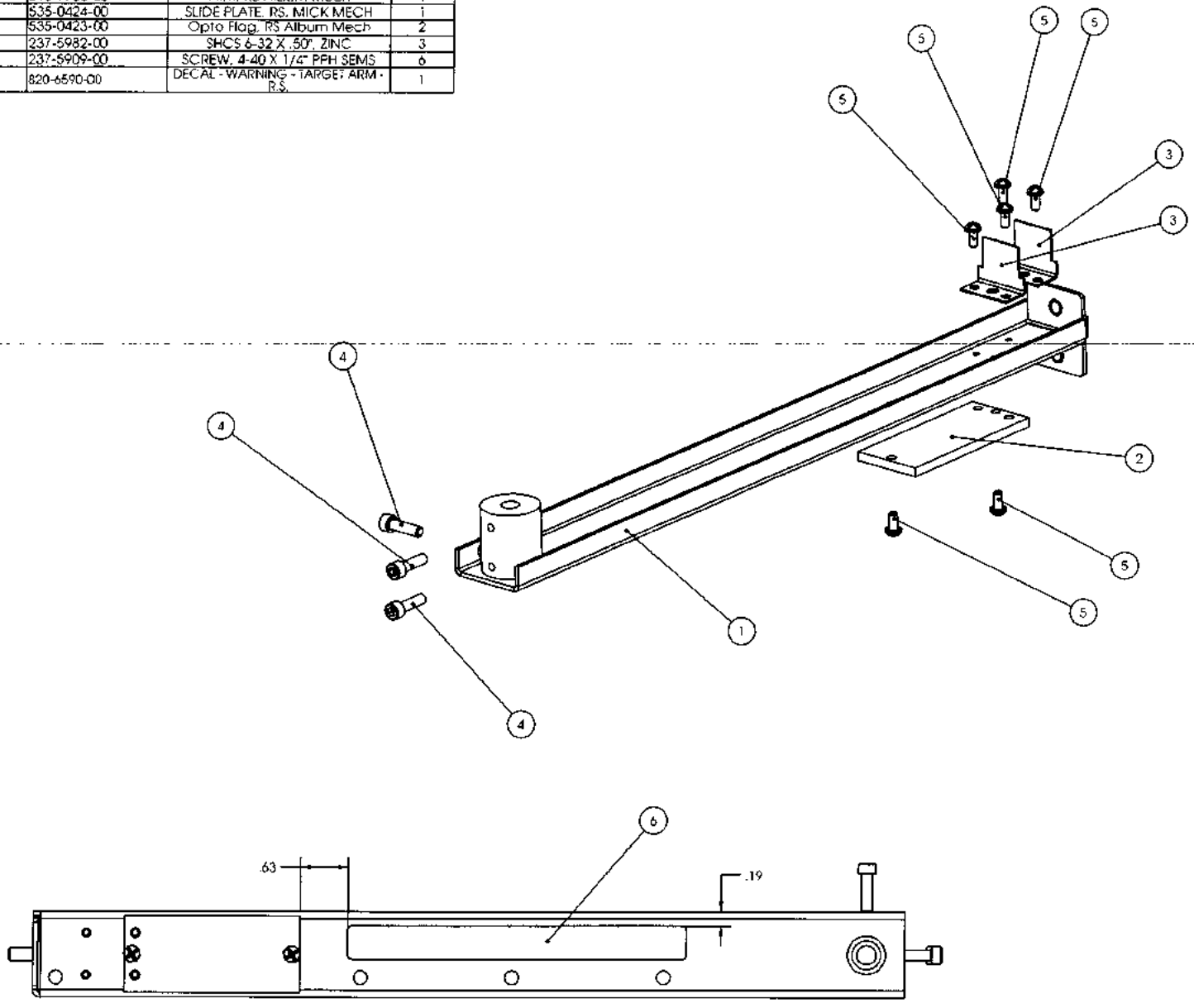

ARM ASSY, MM, RS

511-6916-00

ASSEMBLY, LATCHING BALL LOCK

511-6770-00

ITEM NO.	PART NUMBER	DESCRIPTION	QTY.
1	515-7734-00	WELDMENT, BALL LOCK BRACKET	1
2	545-6816-01	BEARING BLOCK - BALL LOCK	1
3	511-6769-00	ASSY, BALL LOCK PLUNGER & BARS	1
4	090-5044-ND	COIL 26-1200 - NO DIODE	1
5	545-5076-01	COIL SLEEVE	1
6	535-5203-03	COIL RETAINING BRACKET	2
7	266-5020-00	COMPRESSION SPRING-CONICAL	1
8	232-5300-00	SCREW, 8-32 X 1/4" PPH SEMS	4
9	530-5511-00	PLUNGER HEAD	1
10	237-5702-00	SCREW, 10-32 X 1/2 PPH MS	1
11	515-7595-00-ND	MINI-COIL ASSEMBLY, NO DIODE	1
12	237-5975-00	SCREW, 8-32 X 3/8 HWH SWAGE ZN	1
99*	036-5539-10-B1	CABLE, BALL LOCK MECH	1

* ITEM NOT SHOWN

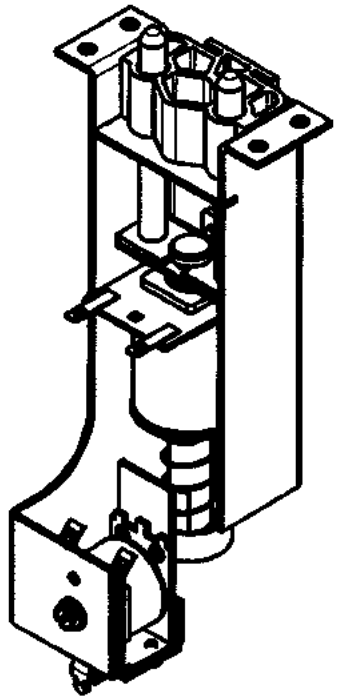

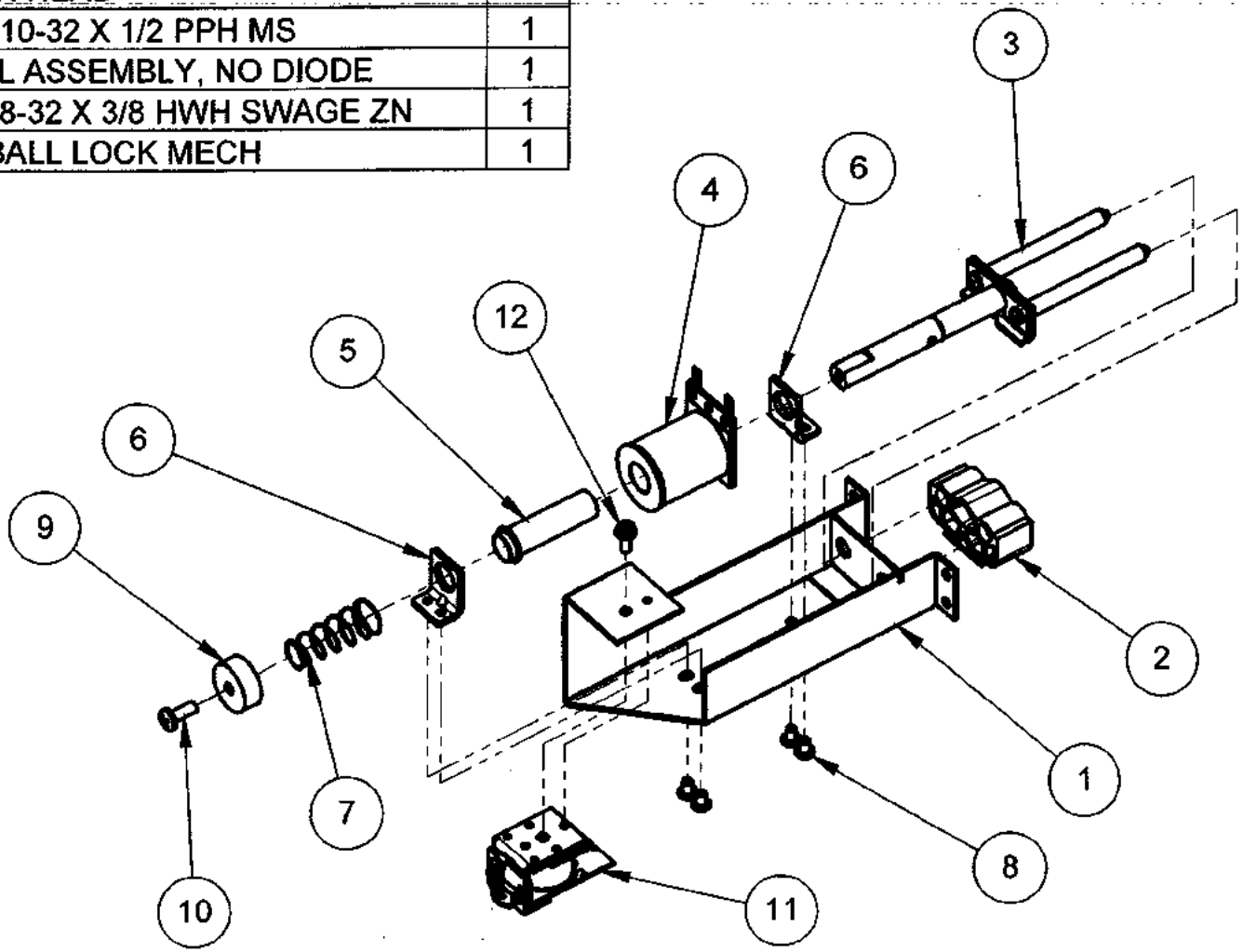

ITEM #	QTY	PART #	DESCRIPTION
1	1	510-5128-00	RIVETED ASSEMBLY - RIGHT RAMP - R.S.
2	1	545-5105-00	RUBBER BUMPER
3	1	515-6556-04	GATE ASSEMBLY
4	3	232-5202-00	SCREW, 6-32 X 1/2" PPH MS SEMS
5	3	240-5005-00	6-32 NYLOK STOP NUT
6	2	237-5809-00	SCREW, #6 X 1/2" PTH A
7	1	535-0429-00	RAMP PROTECTOR - LEFT - RIGHT RAMP - R.S.
8	1	535-0430-00	RAMP PROTECTOR - RIGHT - RIGHT RAMP - R.S.
9	1	510-5131-00	TONGUE ASSY, RS
10	1	511-6914-00	LIPS/BRKT ASSEMBLY
11	2	237-5909-00	SCREW, 4-40 X 1/4" PPH SEMS
12	2	237-5983-01	SCREW, 4-40 x 3/8 PFH MS, SS
13	1	820-6586-00	DECAL - RIGHT RAMP
14	1	510-5125-33R	RS PLASTIC ASSY -33 RIGHT
15	1	242-5001-00	#6 WASHER

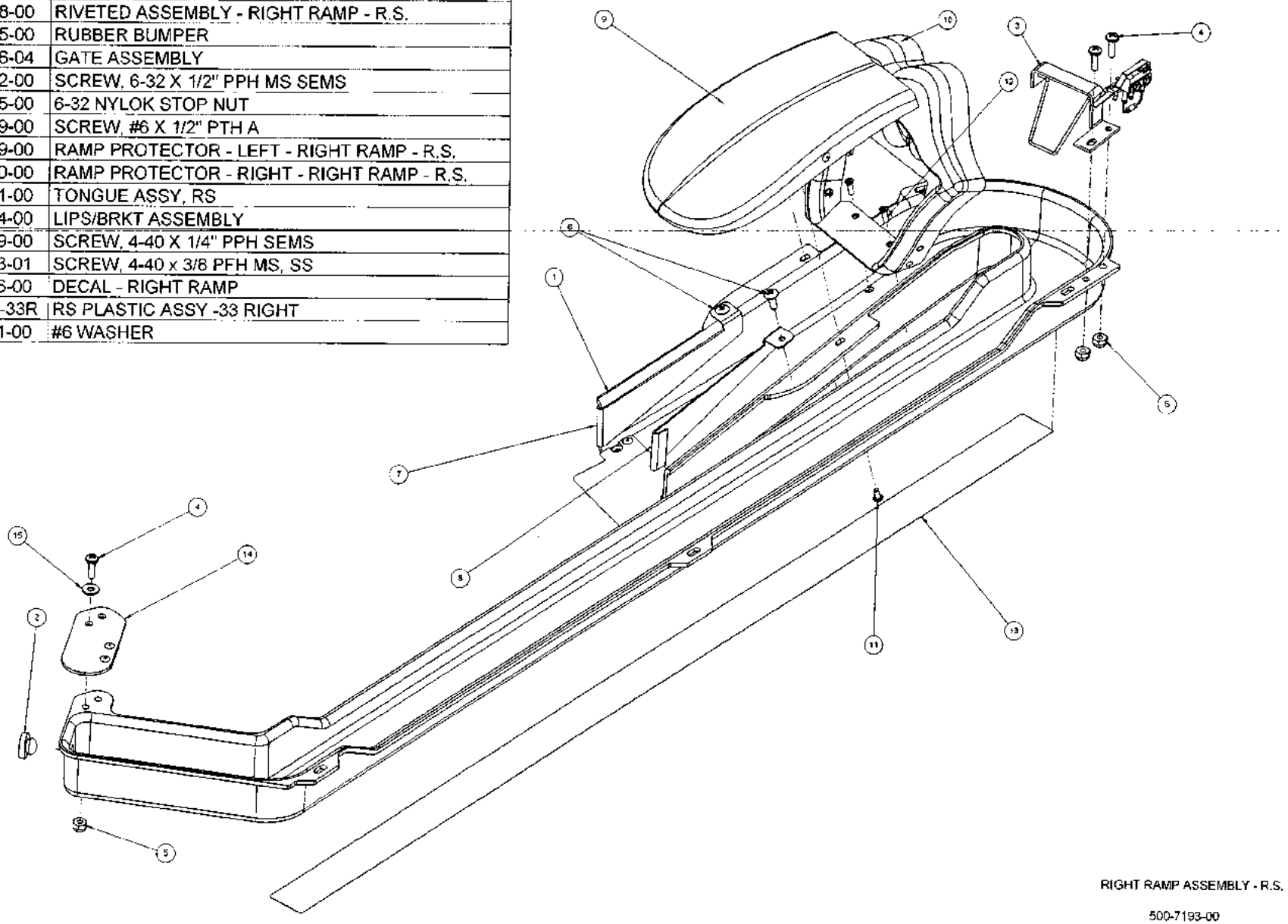

RIGHT RAMP ASSEMBLY - R.S.

500-7193-00

ITEM NO.	PART NUMBER	DESCRIPTION	QTY.
1	545-6830-00	TONGUE, RS	1
2	535-0440-00	TONGUE BRKT, RS	2
3	249-5001-00	RIVET - 1/8 X 3/16	2

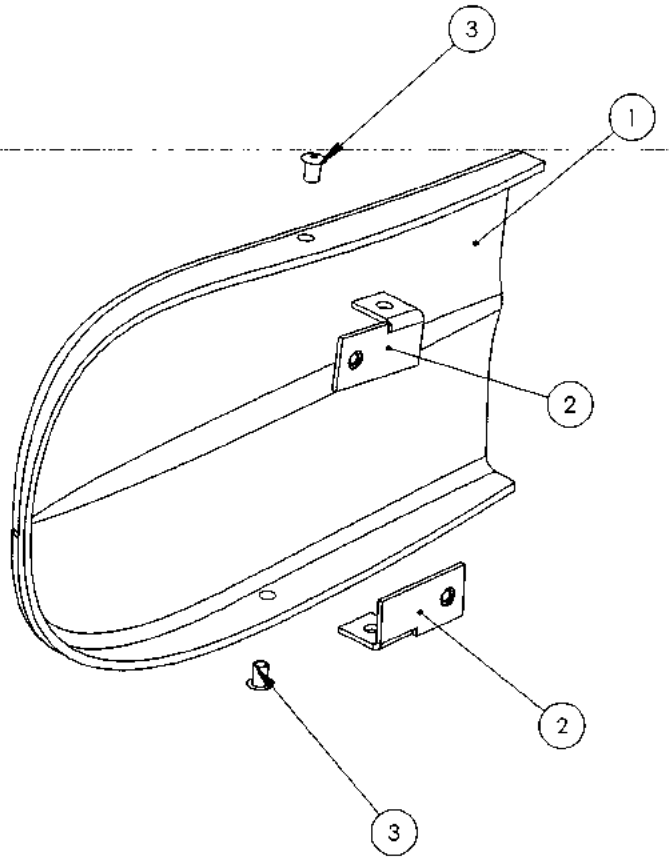

TONGUE ASSY, RS

510-5131-00

ITEM #	QTY	PART #	DESCRIPTION
1	1	545-6831-00	LIPS, RS
2	1	535-0437-00	LIPS MTG BRKT, RS
3	3	237-5909-00	SCREW, 4-40 X 1/4" PPH SEMS
4	1	820-6561-32	LIPS DECAL

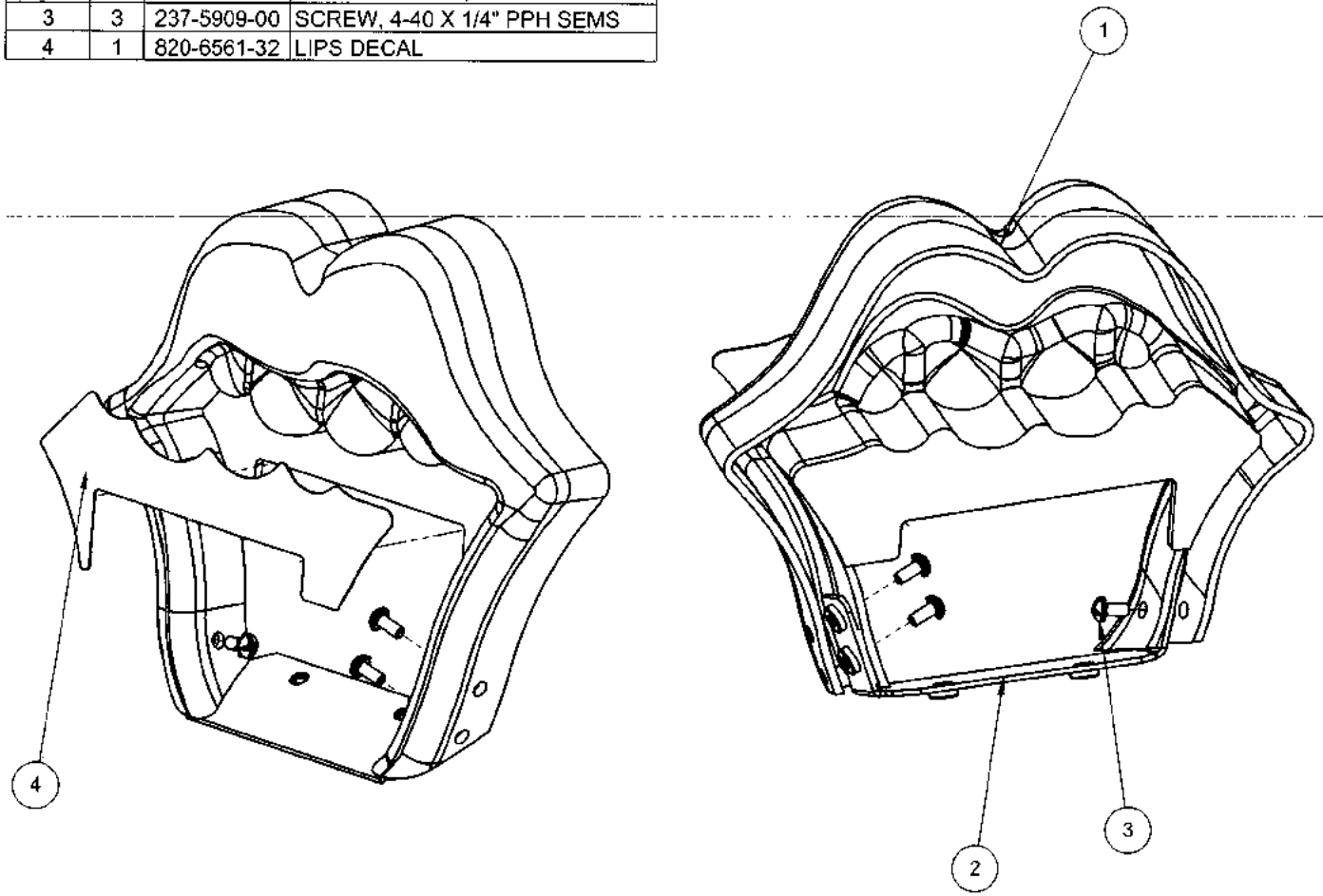

LIPS/BRKT ASSEMBLY

511-6914-00

Left Control Gate Asm., 511-5033-00 & Right C.G. Asm. 511-5033-01 (Items 1-8)

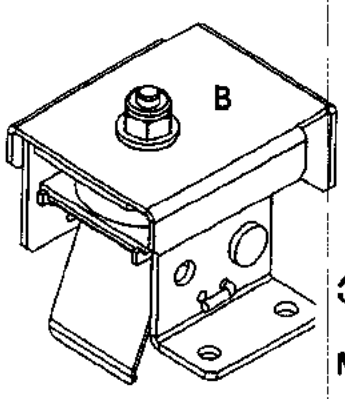

ITEM NO.	PART NUMBER	DESCRIPTION	QTY.
1	535-9647-00	BRACKET, ELEC GATE, RAIL MOUNT	1
2	090-5060-01-ND	MINI-COIL W/CORE - 32-1250, YELLOW	1
3	535-9577-00	COVER, ELECTRIC GATE	1
4	242-5005-00	# 8 WASHER	1
5	240-5102-00	# 8-32 NYLON LOCK NUT	1
6	535-5372-00	REBOUND HINGE PIN	1
7	535-9682-00	GATE - ELECTRIC (MAGNET)	1
8	530-5702-01	CLEVIS PIN W/ RING, 3/16"D X 1-1/2"	1

Item 8 incl. 270-5001-00, Retaining Ring, 3/16" ø

32-1250

NO DIODE

511-5033-00
Control Gate
(Left Style)

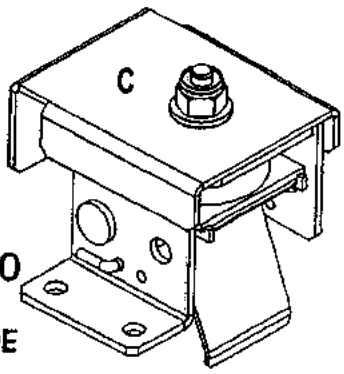

32-1250

NO DIODE

511-5033-01
Control Gate
(Right Style)

Parts are Identical Individually. Assembled as shown for Left and Right applications.

Left Control Gate Exploded View

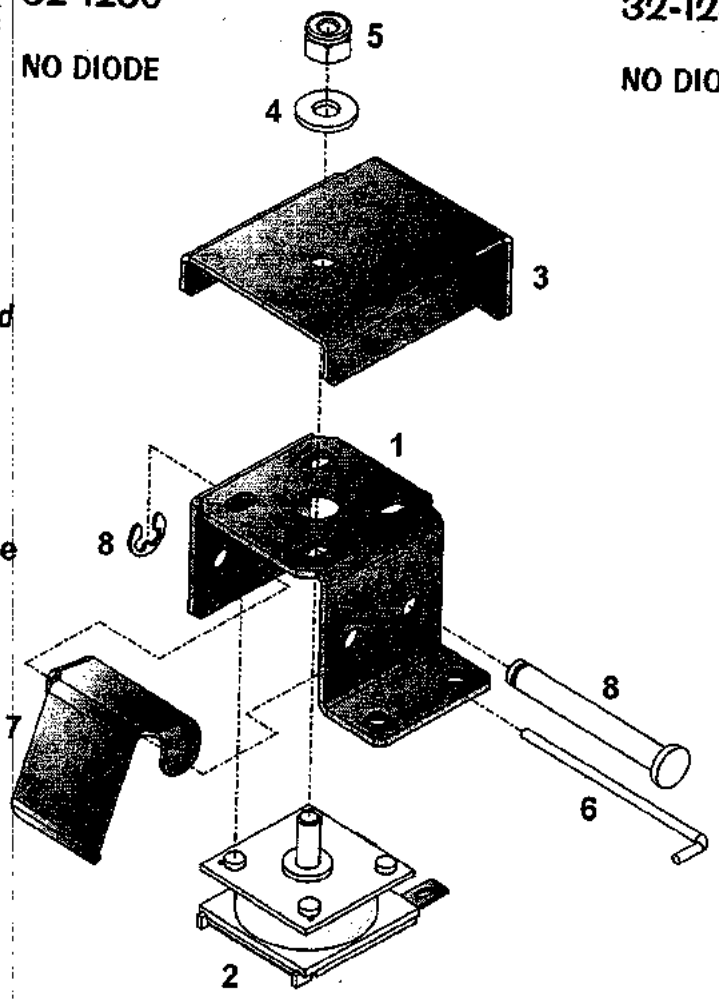

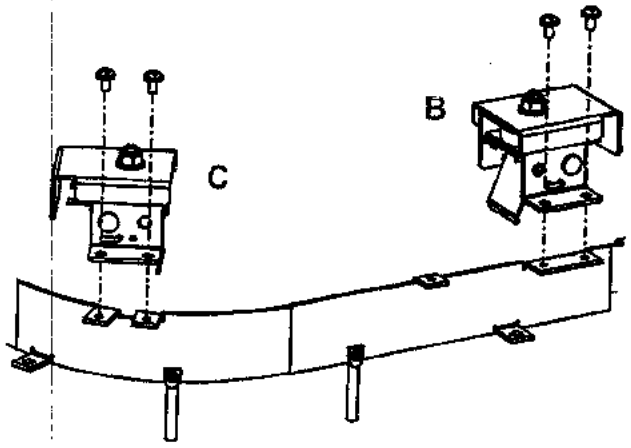

BACK PANEL ASSEMBLY, ROLLING STONES
500-7187-00

ITEM NO.	PART NUMBER	DESCRIPTION	QTY.
1	525-5810-00	BACK PANEL, ROLLING STONES	1
2	519-5000-00-HF	SOCKET & BULB ASSY, CLEAR	5
3	535-8964-00	BRACKET - BACK PANEL SUPPORT	2
4	234-5101-00	SCREW, #8 X 1/2" SLT HWH AB ZINC	8
5	550-5031-06	MINI MARS W/ EARS - YELLOW SB	2
6	519-5101-00-HF	SOCKET/#89 BULB ASSY - HEAVY FILAMENT	2
7	234-5001-02	SCREW, #6 X 1/2" HWH	5
8	830-6130-18	BUTYRATE #18, BACK PANEL, R-STONES	1
9	237-5809-00	SCREW, #6 X 1/2" PTH A	9
10	040-5000-03	1/4" CABLE CLAMP	3
11	515-6508-00	RAMP MOUNTING BRACKET	2
12	254-5008-16	HEX SPACER - 2 1/2 "	2
13	830-6130-23	BUTYRATE #23, ROLLING STONES	1
14	232-5201-00	SCREW, 6-32 X 3/8" PPH MS SEMS	6
15	242-5001-00	#6 WASHER	6
16	830-6130-30	BUTYRATE #30, ROLLING STONES	1
17	254-5008-04	HEX SPACER - 3/4 "	2
97*	600-5003-00	BRAIDED WIRE - 20GA.	3 FT.
98*	631-5000-00	STAPLE - 5/16	18
99*	036-5565-04-B8	BACK PANEL CABLE ASSEMBLY	1

* ITEM NOT SHOWN

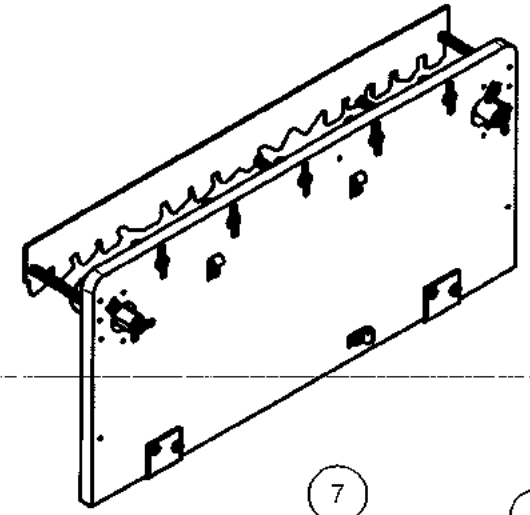

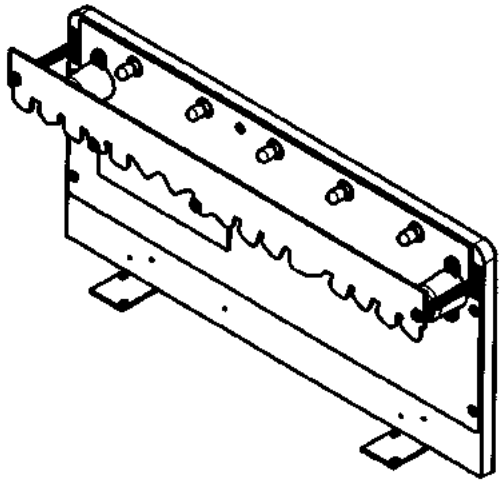

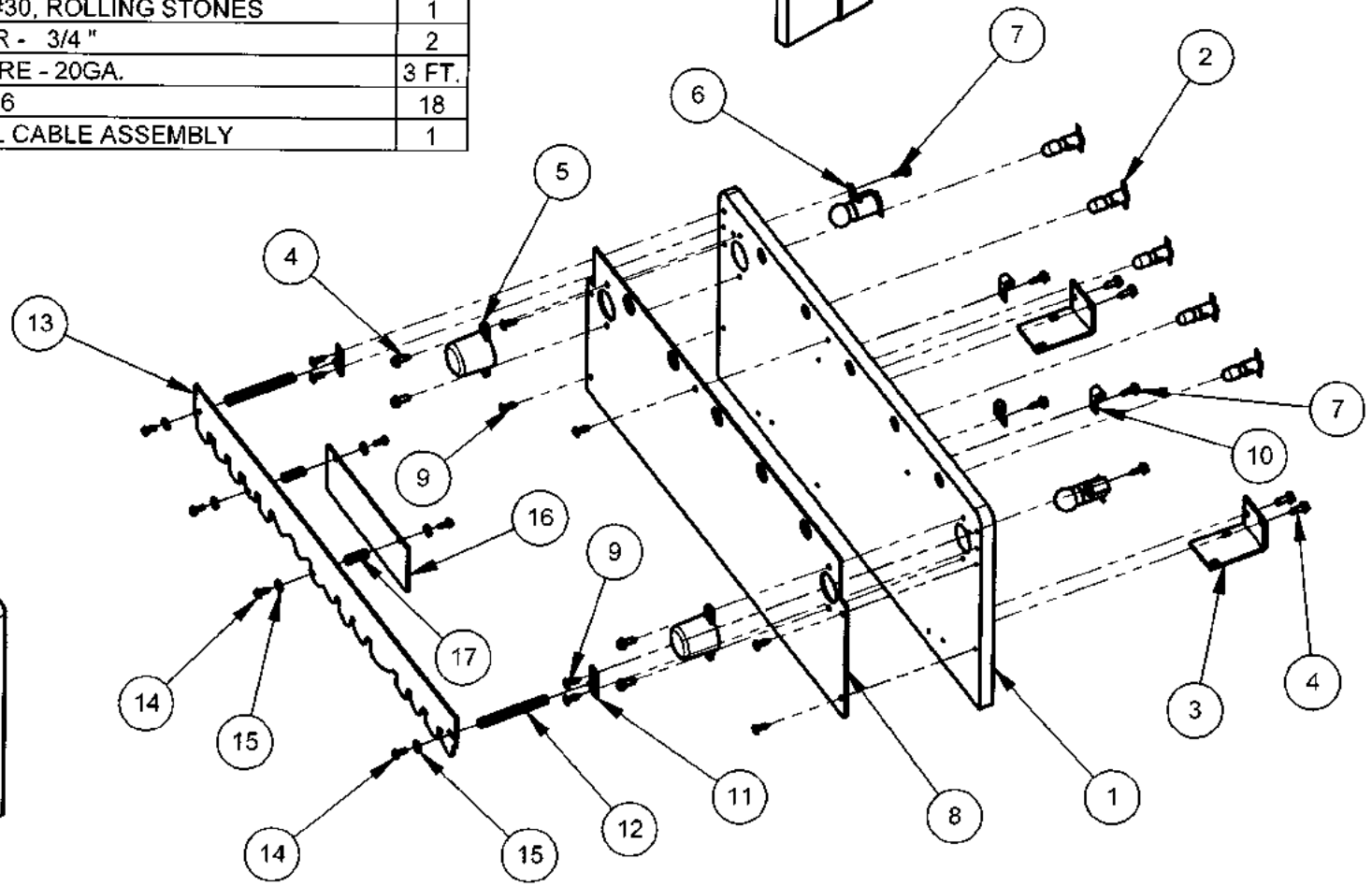

Optional Kits available through your Distributor:

Pinball Location Maintenance Standard Kit (for Rolling Stones Pinball) 502-6002-B8

Standard Kit includes : *8 oz. Novus Wax #2 Fine (Red) (**675-0003-01**), Cloth, Rubber Rings (used above playfield), Bulbs (Bulb quantities vary and is limited to 25 per type), Fuses (1/per type) and 4 Pinballs.* ***Note:*** *Quanties, sizes and contents subject to change without notice.*

Pinball Location Maintenance Deluxe Kit (for Rolling Stones Pinball).....502-6003-B8

Deluxe Kit includes : *Pinball Location Maintenance Standard Kit as described above plus a quantity of Flipper Rebuild Kits.* ***Note:*** *Quantity varies which equals the same quantity of flippers used in this game.*

▲ THIS GAME KIT INCLUDES (2) FLIPPER REBUILD KITS ▲

Plastics*Kit (for Rolling Stones Pinball) 803-5000-B8

Plastics Kit includes: *Plastic Sets (830-6130-XX)*

Decals*Kit (for Rolling Stones Pinball) 802-5000-B8

Decals Kit includes: *Decal Set (820-6580-XX)*

Mylar*Kit (for Rolling Stones Pinball).....802-5001-B8

Mylar Kit includes: *Pop Bumper (820-6584-00)*

****Attention:*** *No individual Plastic or Decal can be ordered separately, unless noted otherwise. Plastics & Decals are subject to change without notice during and / or after production. Key Fobs subject to availability and may or may not be included in the plastic set. All designs, shapes & pieces used subject to change without notice. Kit contents subject to change. Service Bulletin(s) will announce any critical changes, if warranted. The last 2-digits shown on plastics or decals are for reference only.*

ROLLING STONES PREMIUM PARTS:

Pivot Hinge Chrome (Left Style) 535-7999-06

Pivot Hinge Chrome (Right Style)..... 535-7999-07

Speaker Grill Chrome..... 535-8081-04-C1

Chrome Legs with Leveler Asm. 500-5921-10

White Ceramic Pinball..... 260-5012-00

Front Molding Lockdown Asm..... 500-6881-00

Front Molding (Chrome) No Button Hole..... 500-6882-02-02

Bracket, Playfield Support Slide..... 535-6862-05

Start Button..... 500-6388-44-TL

Backbox [S.A.M. System] - Parts ☐

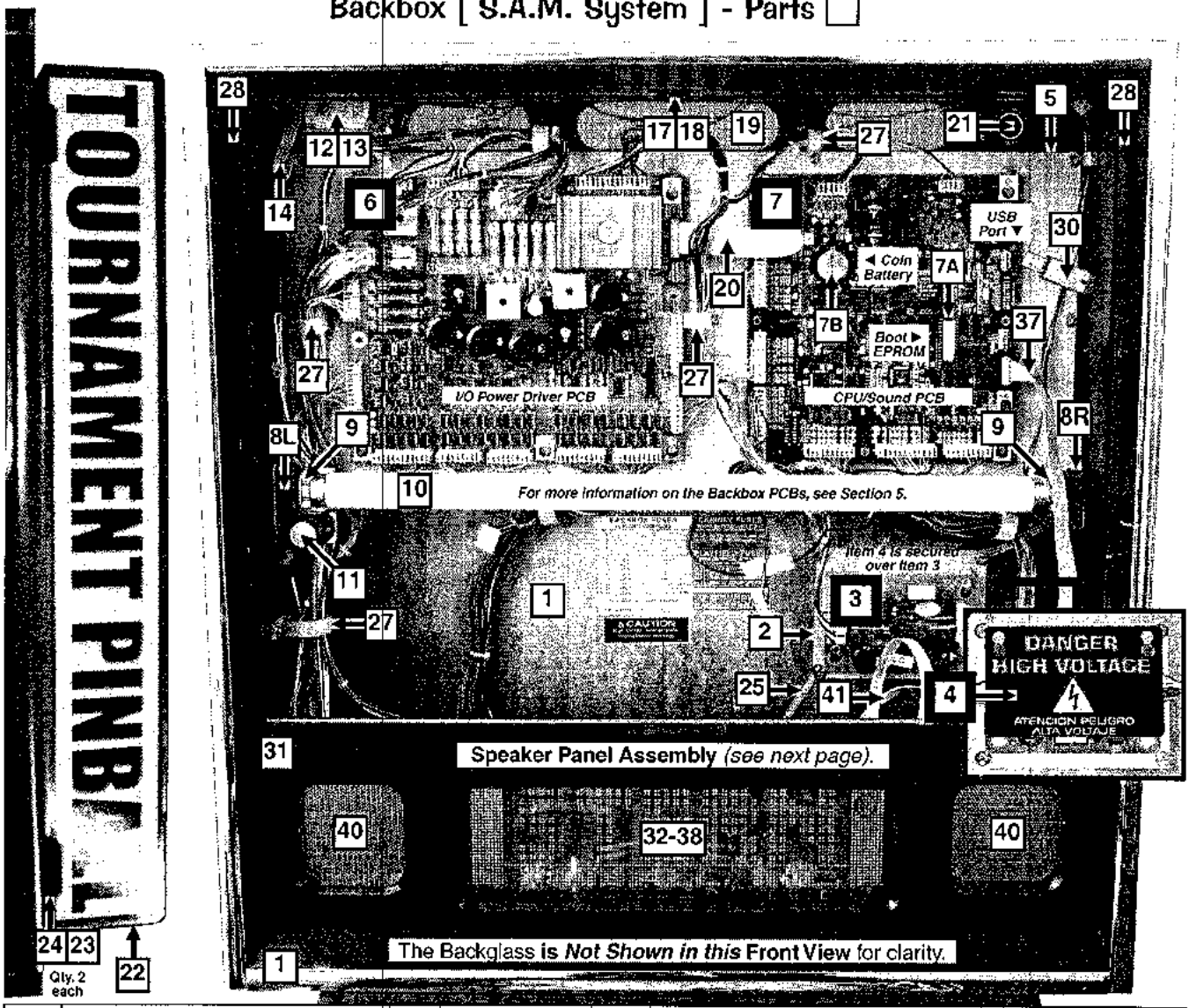

Nr.	BACKBOX PARTS	QTY.	SPI PART Nr.
1	BackboxRolling Stones™ (No Parts)	1	525-5631-17-B8
	Item 1 Note: Chrome T-Molding is installed and cannot be ordered separately. Fuse Description (820-6384-00) and High Voltage Caution (JL) (820-6082-01) Decals.		
2	PCB Metal Mounting Plate [Display]	1	535-9769-00
3	Display Power Supply PCB	1	520-5138-00
	Item 3 is secured to @ bottom by: #8-32 X 3/8" SHWH Swp. (Zinc) (Qty. 2) (237-5975-00)		
4	Plastic Cover [DANGER HIGH VOLTAGE]	1	830-6053-00
	Items 3 & 4 are secured to @ top by: 1-1/4" X 3/8" Plastic Spacer Gray (Qty. 2) (254-5000-05) and #8-32 X 1-3/4" SHWH Ser. (Zinc) (Qty. 2) (237-5975-28)		
5	PCB Metal Mounting Plate [I/O+CPU]	1	535-9664-00
	Items 2 & 5 are secured to Item 1 by: #8 X 1/2" SHWH AB (Zinc) (Qty. 1/hole) (234-5101-00) and #10 Washer 7/32" I.D. X .5" O.D. X 1/16" Thick (Qty. 1/hole) (242-5003-00) *Note: Where a Wire Clamp (Item 27) is mounted, a #10 Washer is not required.*		
6	I/O Power Driver PCB [S.A.M. Sys.]	1	520-5249-00
7	CPU/Sound PCB [S.A.M. System]	1	520-5246-00
	7A: 8MB EPROM #M27C801-100F1 (960-5016-00) *Ordering Note: Programmed EPROM (965-BOOT-SAM)* 7B: Coin Cell Battery (CR2430 3V) (000-0644-01) *For USB Memory Stick information, see Item 30 on the next page.*		
	Items 6 & 7 are secured to Item 5 by: #8-32 X 3/8" SHWH Swage (Zinc) (Qty. 10) (237-5975-00) and 1/4" Slf. Rtn. Spacer White (Qty. 5 [I/O] / Qty. 4 [CPU]) (254-5007-05)		
8L	Fluorescent Light Bracket *(Left Style)*	1	535-7739-00
8R	Fluorescent Light Brckt. *(Right Style)*	1	535-7739-01
	Items 8L & 8R are secured to Item 1 by: #10-24 X 1-1/4" Carriage Bolt Square Neck (Qty. 2/per) (231-5012-00), #10-24 Keps Nut (Qty. 2/per) (240-5207-00) and 3/4" X 3" Reinforced Strapping Tape (Qty. 1, sold in 12" length only) (626-5040-00)		
9	Fluorescent Lamp Holder (Socket)	2	077-5214-01
	Item 9 is secured to Items 8L and 8R by: #6-32 X 5/8" PPH MS (Sems) Zinc (Qty. 1/per) (232-5203-00) Lock-In Fluor. Bulb with Yellow Socket Clip (Qty. 1/per) (545-6271-00)		
10	Fluorescent Tube 24" (F20T8CW)	1	165-5061-00

Nr.	BACKBOX PARTS	QTY.	SPI PART Nr.
11	Starter - Fluorescent (FS2 Light)	1	165-5011-01
	Starter Base *(with leads)* [on Item 8L]	1	077-5213-00
	Item 11 is secured to Item 8L by: #4-40 X 1/2" PPH MS (Sems) Zc. (Qty. 2) (237-5813-00)		
12	Ballast Mounting Plate	1	535-8657-00
13	Ballast *CU452-W 1/2" Core 120v 60 Hz 13W*	1	010-5015-00
	Items 12 & 13 are secured to Item 1 by: #8 X 1/2" SHWH AB (Zinc) (Qty. 2) (234-5101-00) >>> CAUTION - VERY HOT" Decal (820-6266-00) *EU / UK Only : Ballast, 5/8" Core 50/60 Hz (010-5015-01)*		
14	Ground Strap (5")	1	600-5006-05
15*	Roto Lock Male *(on Cabinet)*	1	355-5006-01
16	Roto Lock Female *(R2-0002-02)*	1	355-5006-02
	Item 16 is secured by: #10-24 X 1-3/4" CBSN (231-5022-00), #10-24 Keps Nut (Qty. 2) (240-5207-00), #10-24 X 2" CBSN (231-5045-00) and #10 Washer 7/32" I.D. X .5" O.D. X 1/16" (Qty. 5) (242-5003-00); *See opposite next page.*		
17	Lock Mounting Plate	1	535-0072-00
18	Lock 5/8" Barrel, 3/4"ø, 1.5" Flat Cam	1	355-5055-00
	Items 17 & 18 are secured by: #8 X 1/2" TP Torx T20 Black (Qty. 2) (237-6173-05)		
19	Back Vent Grill 2-1/2" X 18"	1	545-5072-02
20	Ribbon Cable, 20-Pin (3.5")	1	036-5000-350
	Item 20 connects the I/O Pwr. Drvr. PCB to the CPU/Sound PCB; For 14-Pin see next page.		
21	Button Hole Plug (Blk) (Happ #52-6214-00)	1	500-6566-00
	Item 21 plugs the Access Hole required if using optional BETAbrite Sign or Data cables.		
22	Header Sign TOURNAMENT PINBALL	1	545-6133-00
23	Friction Hinge (Black) *behind* ▲▼	2	390-5053-00
24	Block / Sign & Hinge Stop (Black)	2	545-6174-00
	Item 22 is sandwiched between Items 23 & 24 through 2 holes on each side. Item 23 is secured to Item 1 by: #8-32 X 3/8" PPH MS Ext. Sems (Zinc) (Qty. 2/per) (232-5301-00) and Item 24 to Items 22-23 by: #8 X 5/8" PPH AB Black (Qty. 2/per) (232-5101-01)		

PARTS TABLE & VIEWS CONTINUED ON THE NEXT PAGE. ▶

Backbox [S.A.M. System] - Parts

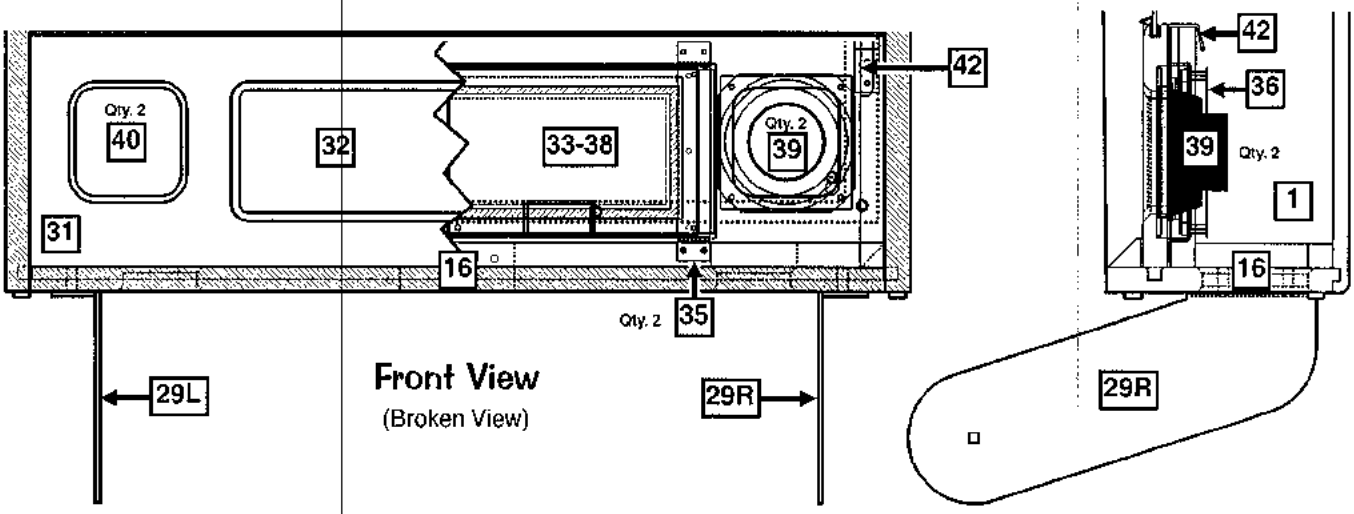

Speaker Panel [S.A.M. System] - Parts

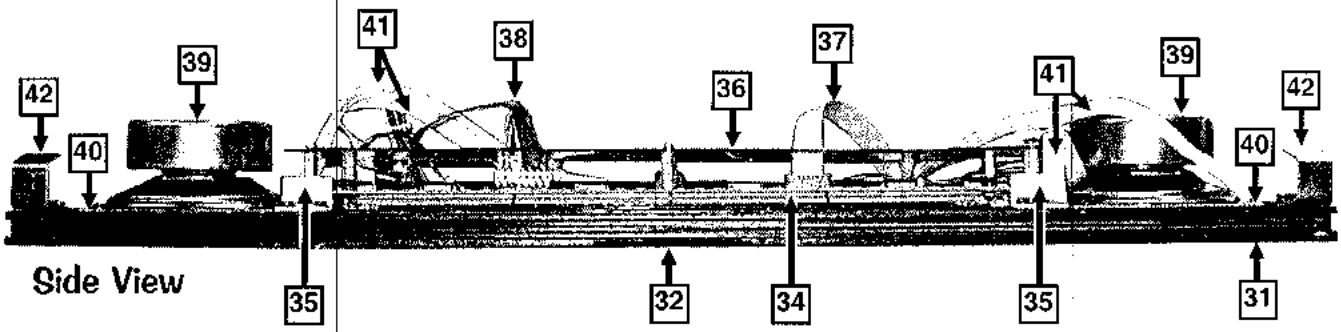

Nr.	BACKBOX PARTS	QTY.	SPI PART Nr.
◄ *PARTS TABLE & VIEWS CONTINUED FROM THE PREVIOUS PAGE.*			
25	Braided Wire (1-1/2 Feet)	1	600-5001-00
Item 25 is secured by: Staple 5/16" (Qty. 23) (631-5000-00)			
26*	Zip Cable Tie (Screw Down Style)	2	040-5005-00
Item 26 is secured @ inside bot. by: #8 X 1/2" SHWH AB (Zinc) (Qty. 1/per) (234-5101-00)			
27	Clamps [Multiple Sizes]	15	040-5000-XX
Item 27 secured by: #8 X 1/2" SHWH AB (Zinc) (Qty. 1/per) (234-5101-00) *For the following sizes, replace -XX with:* .1/4" Double = -23 (Qty. 5); 1/2" Single = -06 (Qty. 3); 3/4" Single = -08 (Qty. 4); 1" Single = -09 (Qty. 1); 1-1/4" Double = -30 (Qty. 1)			
28	Foam 3/16" Thick X 1/4" Wide X 12"	3	626-5026-00
Above Item 28 is self-adhesive. 17.5" strip on each side. Sold in 12" Lengths only.			
29L	Pivot Hinge *(Left Style)*	1	535-7999-00
29R	Pivot Hinge *(Right Style)*	1	535-7999-01
Items 29L-29R are secured to Backbox by: 1/4"-20 X 1-1/4" C.B. Sq. Neck (Qty. 4) (231-5003-00) and 1/4"-20 Flange Nut (Qty. 4) (240-5300-00)			
Items 29L-29R are secured to Cabinet by: Spacer Hex Nut 1/2" O.D. - 1/4-20 X 1/2" TD (Black) (Qty. 1/per) (254-5042-00), Nylon Spacer (Black) (Qty. 1/per) (242-5084-00), 1/4-20 X 1/2" Carriage Bolt Square Neck (Black) (Qty. 1/per) (231-5072-00) and Washer 1" O.D. X 1/2" I.D. X 1/16" (Black) (Qty. 1/per side, *only if required*) (242-5087-00)			
30*	Memory Stick USB 1.1+ [Generic] 64MB		970-0064-00
	Memory Stick USB 1.1+ [Generic] 128MB		970-0128-00
Item 30 was not included with your game. Read the inside cover or go on-line for more info. To order with the latest game code copied onto it, add -98 to the Part Nr. (970-0128-00-98). File(s) can be downloaded from our website *(Files are 25MB or larger, DSL or Fast Modem recommended).* Not all manufacturers of Memory Sticks are compatible with our system. Test it out, if it doesn't work properly, return your purchase and order the memory stick through you local pinball distributor *(Stern Pinball Memory Sticks guaranteed compatible).*			
(ASM. REF. 505-6002-98-98, Items 1-42 Only, [29-30 not included in assembly])			

Take Note:

* An asterisk (*) indicates item(s) are not noted in the pictorials.

Nr.	SPEAKER PANEL PARTS	QTY.	SPI PART Nr.
31	Speaker Panel (Black Wood)	1	525-5515-00
32	Plastic Shield (Display Front Cover)	1	545-5884-00
Item 32 is secured to inside Item 31 by: #6 X 3/8" SHWH AB (Zinc) (Qty. 8) (234-5000-00)			
33*	Foam 3/16" Thick X 1/4" Wide X 12"	3	626-5026-00
Above Item 33 is self-adhesive. Located between Items 32-34. Sold in 12" Lengths only.			
	128 X 32 Dot Matrix Display PCB	1	520-5052-00
34	/// EURO ONLY RoHS /// 128 X 32 DM Pin-LED PCB		520-5052-04
	/// EURO ONLY RoHS /// Dot Matrix Pin-LED Bezel		545-6281-00
Item 34 is secured to Item 35 by *(at corners)*: 3/16" X 3/8" Spacer Gray (Qty. 4) (254-5000-18) and #6-32 X 1/2" SHWH Swage (Serr) Zinc (Qty. 4) (237-5976-03)			
35	Dot Matrix Display Mounting Bracket	2	535-8368-01
Item 35 is secured to Item 31 by: #8 X 1/2" SHWH AB (Zinc) (Qty. 4/per) (234-5101-00)			
36	Plastic Shield (Display Back Cover)	1	830-6040-00
Item 36 is secured to Item 34 by: 1/2" X 1/4" Hex Spacer #6-32 Tap (Qty. 4) (254-5008-03), 3/4" X 1/4" Hex Spacer #6-32 Tap (Qty. 2) (254-5009-04), #6-32 X 1/4" PPH MS (Sems) Zinc (Qty. 2) (232-5200-00) and #6-32 X 3/8" PPH (Qty. 6) (232-5201-00).			
	Ribbon Cable, 14-Pin (32")	1	036-5260-32
37	/// EURO ONLY RoHS /// LED Ribbon Cable Filter PCB		520-5259-00
Item 37 (14-Pin) connects the 128 X 32 Dot Matrix Display PCB to the CPU/Sound PCB.			
	Display Cable *(Wiring Harness)*	1	036-5454-01
38	/// EURO ONLY RoHS /// LED Display Adapter Harness		036-5520-00
39	Speaker (Shld.) 4" 8Ω #MG ELE 4060SH	2	031-5004-02
40	Speaker Grill *(Chrome w/no Artwork)*	2	535-8081-04
Items 39-40 are secured by: #8 X 1/2" SHWH AB (Black) (Qty. 4/per) (234-5101-01)			
41	Ground Strap (25") [2 per : Items 35 & 39]	4	600-5006-25
42	Speaker Panel Hook Bracket	2	535-7009-02

Nr.	BACKGLASS PARTS	QTY.	SPI PART Nr.
i*	Glass (Tempered) 25.906" X 19.187" X .125"	1	660-5038-02
ii*	Rolling Stones™ Film Art (#98)	1	830-52B8-00
iii*	Top Plastic Channel - 26"	1	545-5018-15

Nr.	BACKGLASS PARTS	QTY.	SPI PART Nr.
iv*	Bottom Plastic Lift Channel - 26"	1	545-6313-01
v*	Plastic Edging (Left/Right) - 18-1/8"	2	545-5018-14
Items i-v are secured to Item I by: Tape (Double-Sided), 12" (Qty. 1) (626-5005-00) *Note: Only 6" required, sold in 12" lengths only.*			
(ASM. REF. 515-5450-00-98, Items i-v)			

Cabinet Parts & Switches

For Backbox Parts see the previous two pages.

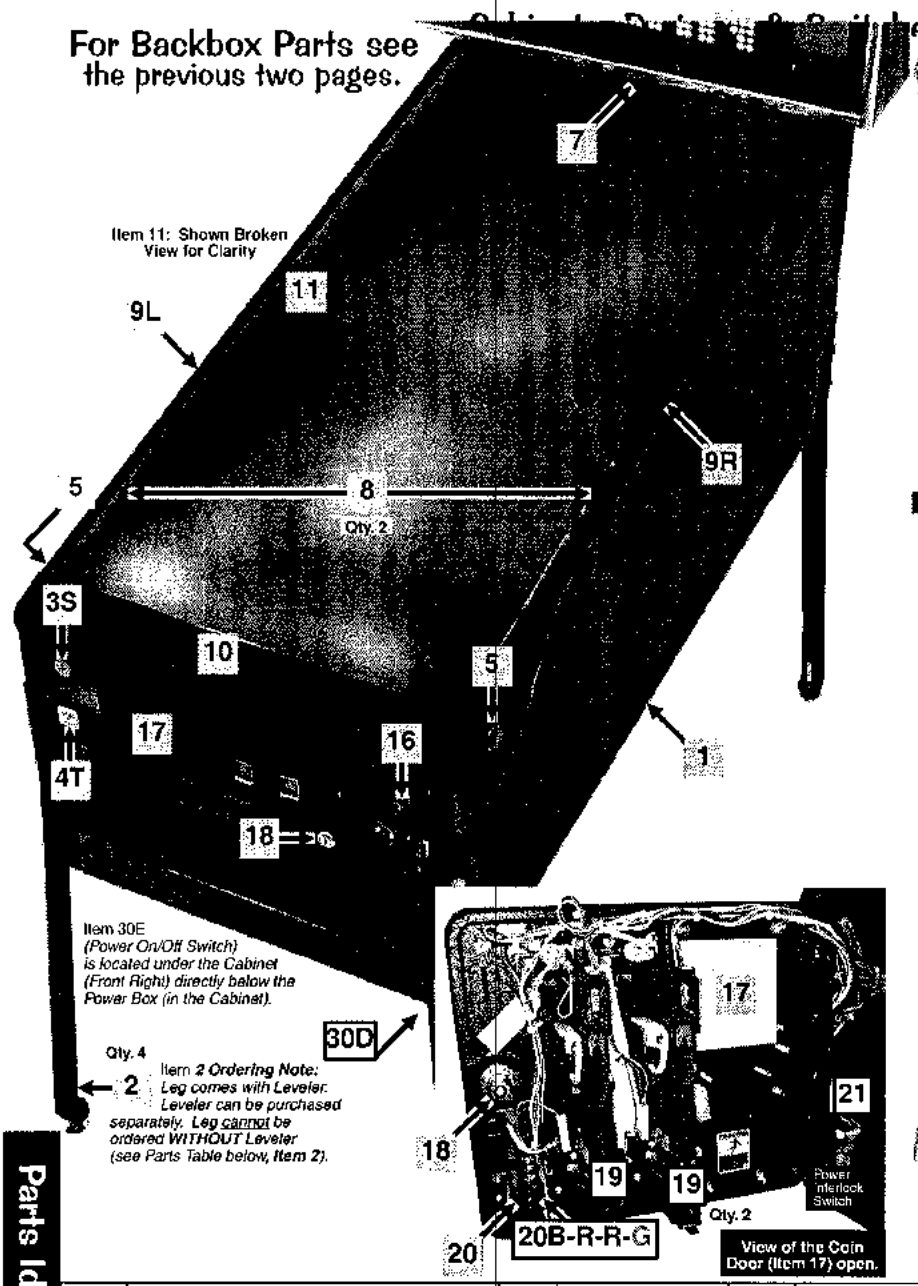

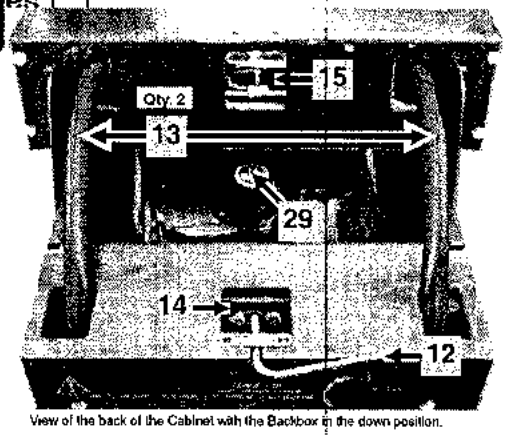

View of the back of the Cabinet with the Backbox in the down position.

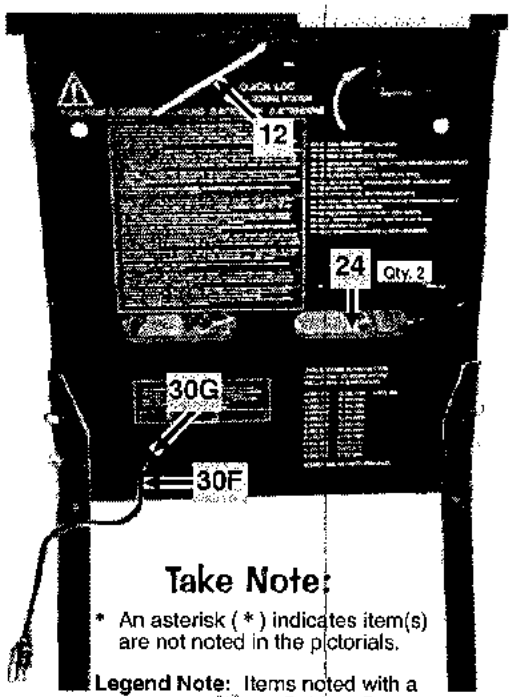

Item 30E *(Power On/Off Switch) is located under the Cabinet (Front Right) directly below the Power Box (in the Cabinet).*

30D

Qty. 4

2 Item *2 Ordering Note: Leg comes with Leveler. Leveler can be purchased separately. Leg cannot be ordered WITHOUT Leveler (see Parts Table below, Item 2).*

View of the Coin Door (Item 17) open.

Take Note:

* An asterisk (*) indicates item(s) are not noted in the pictorials.

Legend Note: Items noted with a cyan square ▫ are Cabinet Parts. Items noted with a white square ☐ are Switches.

Nr.	CAB. PARTS & SWITCHES	QTY.	SPI PART Nr.
1	Screened CabinetRolling Stones™ (No Parts)		525-5395-15P-B8
2	Black Leg with Leveler Asm.	4	500-5921-50
	Item 2 is secured by: Leg Bolt Back Plate (535-7394-00) and Leg Bolt 3/8" X 16 X 2-1/2" Hex 5/8" Hd. (2/per) (231-5001-01) *Leg Leveler ONLY (3/8"-16 X 3") (500-5017-00).*		
3S	**Start Button** (Green Round) with Sw. + Lamp	1	500-6388-44-TL
4T	**Tournament Button** (Yel. Sq.), w/Sw. + Lamp		500-6587-06-TL
	Item 3S & 4T includes the Switch & Lamp (No Wiring; desolder old wiring where required). Switch or Bulb replacement: ↻ TWIST↺ LOCK (-TL) >> not snap-in << Assembly Parts Included : Microswitch (180-5174-00); #555 Wedge Base Clear Bulb (165-5002-00); *If 4T is not desired, use optional Button Plug Black (500-6566-00). Requires 3-Lug Terminal Strip (055-5204-03) and Diodes, 1N4004 (Qty. 2) (112-5003-00) inside cabinet under button(s) for Lamp Operation (Diode for Switch, located on Switch.)*		
5	Flipper Button (White) Assembly (No Switch)	2	500-5026-38
	Item 5 is secured by: Pal Nut for Flipper Button (Metal) (Qty. 2/per) (240-5003-01) *Pal Nut inside cabinet secured by:* #8 X 1/2" SHWH AB (Zinc) (Qty. 1/per) (234-5101-00) and Washer (Zinc), .187" ID X .675" OD X .048" Thick (Qty. 1/per) (242-5059-00)		
6S	Flipper Switch Single Assembly	2	500-6889-01
	Assembly Parts Included : Flipper Switch Stack Single *(Paliney Contact)* (180-5160-01) and Capacitor - Ceramic .05 Mfd 25 volt (130-5001-00) **Item 6S/6D are secured to Cab. by:** #6 X 1-1/4 SHWH AB (Zinc) (Qty. 2/per) (237-5959-00)		
6D	Flipper Switch Double Assembly	0	500-6890-01
	Assembly Parts Included : Flipper Switch Stack Double *(Paliney Contact)* (180-5164-01) and Capacitor - Ceramic .05 Mfd 25 volt (130-5001-00) **Item 6S/6D are secured to Cab. by:** #6 X 1-1/4 SHWH AB (Zinc) (Qty. 2/per) (237-5959-00)		

Nr.	CAB. PARTS & SWITCHES	QTY.	SPI PART Nr.
7	Rear Glass Channel 20-3/8" Length	1	545-5038-00
8	Plastic Channel 42-5/8" Lg. (Left/Rt.)	2	545-5017-00
9L	Side Armor (Left) W/O Button Guard	1	535-7297-02
9R	Side Armor (Right) W/O Button Guard	1	535-7297-02
	Items 9L & 9R are secured @ front & side by: Perm Stud 1/4 X 1" Flange Head Black (Qty. 1/per) (237-5116-01), 1/4-20 Flange Nut (Qty. 1/per) (240-5300-00) and #8 X 1/2" T20 Tamper Proof Black (Qty. 5/per) (237-6173-05); @ rear (backbox) by: #10-24 X 1" Sq. Neck Carrg. Bolt Black (Qty. 1/per) (231-5021-00) and #10-24 Hex Nut (Qty. 1/per) (240-5202-00)		
10	Front Molding (Black) < NO BUTTON HOLE >	1	515-7729-00
	Item 10 includes: Self-Adhesive Foam Rubber 3/8" X 3/16" X 20-3/8" (3') (626-5001-00) *Items 10 works with Item 22 (next page) ONLY.*		
11	Playfield Glass (Tempered) 21" X 43" X 3/16"	1	660-5001-00
12	Hex Key Allen Wrench 5/16"	1	777-0001-00
13	Corrugated Tubing Black 1"ø X 2.5' Lg.	1	605-5008-03
	Above Item 13 covers the Cable Wiring Harnesses going into the Backbox from the Cabinet.		
14	Roto Lock Male (R2-0055-02)	1	355-5006-01
	Item 14 is secured by: #10-24 X 1-3/4" Carriage Bolt Square Neck (Qty 2) (231-5022-00), #10-24 Nylon Stop Nut (Qty 2) (240-5206-00) and #10 Washer, 7/32" ID X 1/2" OD X 1/16" Thick (Qty. 2) (242-5003-00)		
15	Roto Lock Female *(on Backbox)*	1	*355-5006-02*
16	Ball Shooter (Plunger) Assembly	1	500-6146-00-04

PARTS TABLE & VIEWS CONTINUED ON THE NEXT PAGE. ▶

Main Playfield Bottom - Miscellaneous Parts and Brackets

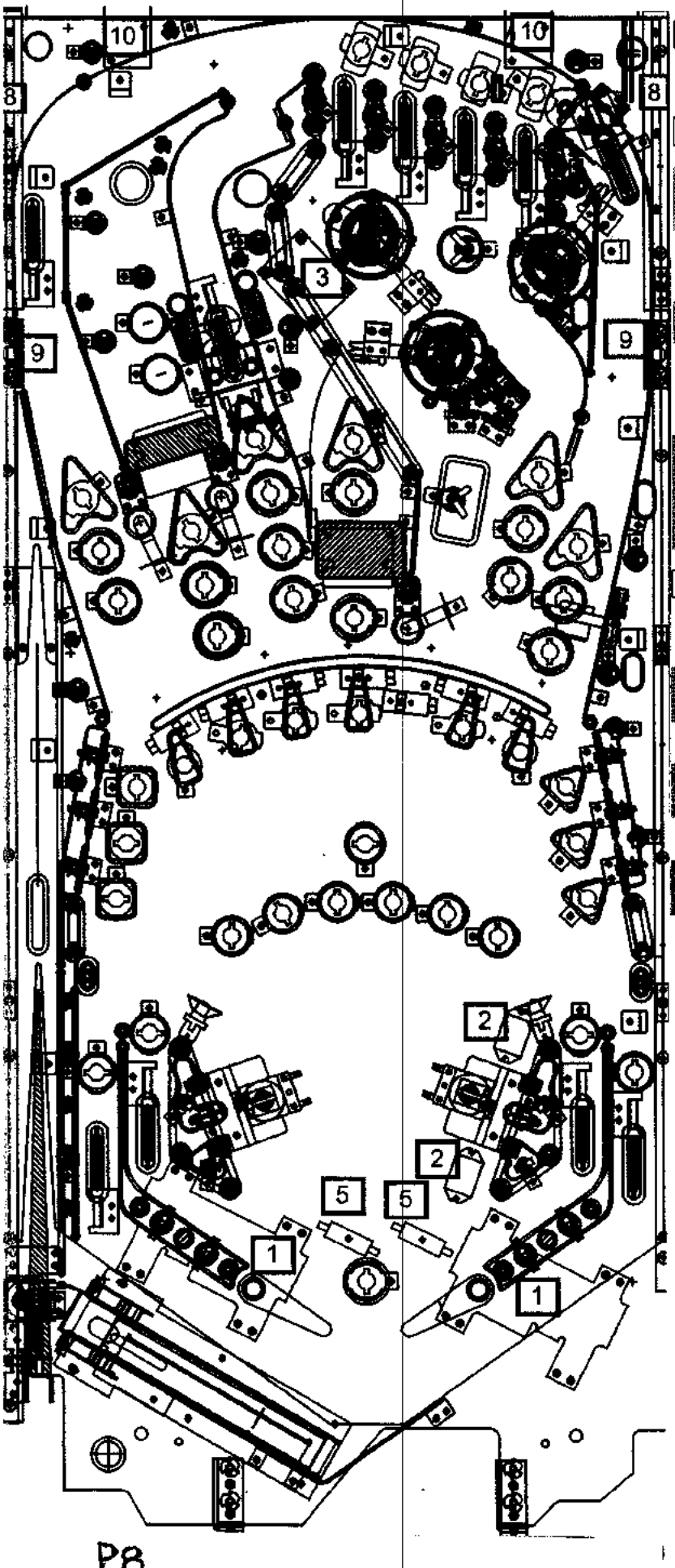

Nr.	THE PLAYFIELD	QTY.	SPI PART Nr.
Main P/F	P/F Screened w/ Inserts & NO Parts	1	830-5100-B8
	P/F Complete w/ Inserts & ALL Parts	1	505-6004-B1-B8

Nr.	MISC. PARTS (BELOW)	QTY.	SPI PART Nr.
1	Insulation Fiche Paper (under Lower Flippers)	2	545-5721-00
2	Relay+ Conn Asm Amp Sutherland	2	590-5004-01
2	Relay+ Conn AsmTransporter (Prem)		511-5249-01
3	PCB, OPTO Transceiver Amplifier	1	520-5239-01

Item 3 is secured by: #6 X 3/4" SHWH AB (Zinc) (Qty. 4) (234-5003-00)
Application Note : Required for OPTO Transceiver Pairs (500-5775-01) listed on the next page (... Switches). See the Yellow Pages, PCBs, Pages y 42 - y 43.

4	Resistor Assy (2 2 ...)	2	511-5223-00
	See the Yellow Pages.		
5	3A 250v Slo-Blo Fuse	2	200-5000-08
	Fuse Clip Holder (Socket)	1	205-5000-01

Item 5 is secured by: #6 X 1/2" PPH AB (Qty. 1/per) (237-5805-00)
Note: Item 5, Fuse Clip Holder (Socket) 205-5000-01 is part of a set of 12 (205-5000-12). You can order them as individuals (...-01) or a set of 12 (...-12).

6	Diode Terminal Strip 3-Lug (813) Isolated		055-5204-03
6	Diode Terminal Strip 5-Lug (813) Isolated		055-5204-05
6	Diode Terminal Strip 7-Lug (813) Isolated		055-5204-07

Items 6B-6D are secured by: #6 X 3/8" PPH AB 2ea. (Qty.) 2/per (234-5000-00) and Item 6E (Qty.) 1/per to Cabinet. Molex (Wire) Series (112-6004-00) are used on all 3-Lug and 5-Lug. 7-Lug Diodes may be used for Flippers and/or Jumpers.

Nr.	MISC. BRACKETS (BELOW)	QTY.	SPI PART Nr.
7	Bracket, Playfield Support Slide		535-6862-05

Item 7 is secured by: #10 X 1/2" HWH A (Zinc) (Qty. 2/per) (237-5817-00), #8-32 X 5/8" SHWH Swage (Zinc) Wax (Qty. 1/per) (237-5975-03) and #8-32 T-Nut (Qty. 1/per) (240-5101-00)

8	Bracket, Edge Slide (Extended)	2	535-5988-01
	Item 8 is secured by: 2 X 1/2" PPH (Zinc) (Qty. 2/per) (237-5805-00) and #8-32 T-Nut (Qty. 2/per) (240-5101-00)		
9	Bracket, Pivot Pin Welded Assembly	2	500-5329-03

Item 9 is secured by: #8-32 X 5/8" SHWH Swage (Zinc) Wax (Qty. 2/par) (237-5975-03)

10	Bracket, Back Panel Support	2	535-6964-00
	Item 10 is secured by: #6 X 3/4" PPH AB (Zinc) (Qty. 2/per) (234-5003-00) and [illegible]		
11	Bracket, Hole Protect *(center up-post)*	0	535-0289-00

Item 11 secured under the playfield by: #6 X 1/2" SHWH AB (Zinc) (Qty. 2) (234-5101-00)

12	Flip Post (White Nylon) [illegible]	0	545-5253-01
	Item 12 is secured by: #6 X 3/4" PPH AB (Zinc) (Qty. 1/per) (234-5003-00) and #6 X 1/2" PPH AB (Zinc) (Qty. 1/per) (234-5005-00) [illegible]		

Playfield - Metal Posts & Fin Shank Screws (Actual Size) †

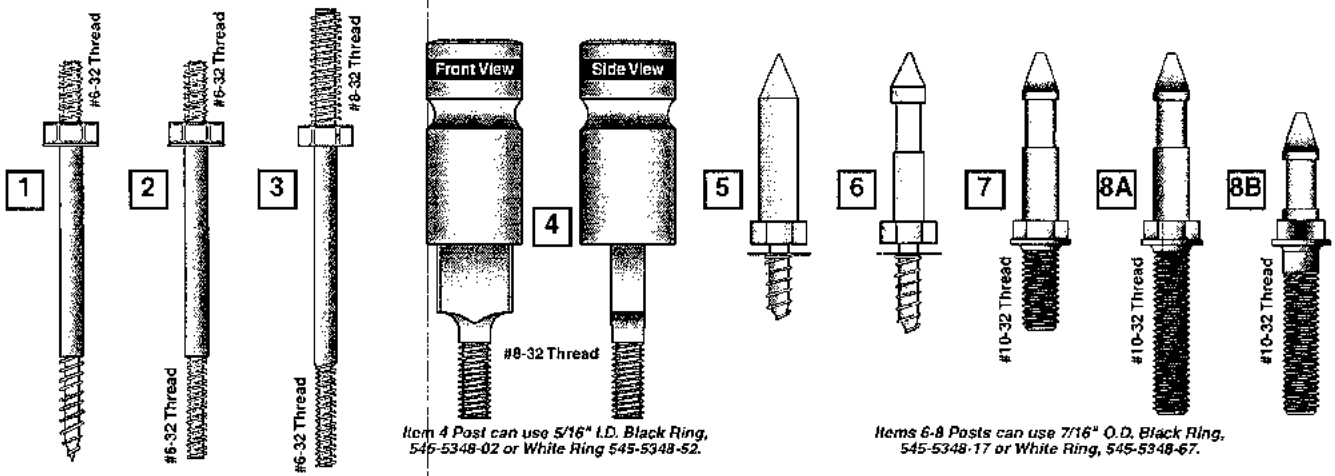

Item 4 Post can use 5/16" I.D. Black Ring, 545-5348-02 or White Ring 545-5348-52.

Items 6-8 Posts can use 7/16" O.D. Black Ring, 545-5348-17 or White Ring, 545-5348-67.

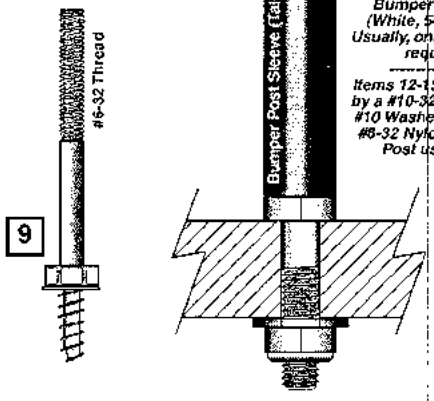

Items 11-16 & 18 Posts can use a Black Bumper Post Sleeve (Tall), 545-5308-00 (White, 545-5308-08 or Red, 545-5308-22) Usually, only Posts which are in the ball path require a Bumper Post Sleeve.

Items 12-15 & 18 Posts are typically secured by a #10-32 Nylon Stop Nut, 240-5203-00 and #10 Washer, 242-5010-00 (Item 11 Post use a #8-32 Nylon Stop Nut, 240-5102-00; Item 16 Post use a #8-32 T-Nut, 240-5101-00).

A & B *Items A & B Note: Typically used to secure Hex Spacers onto the Playfield Wood or Back Panel.*

C *Item C Note: Quantity 4 on bottom Cabinet Speaker Grill (Qty. 4) (also requires #6-32 Nylon Stop Nut, 240-5005-00).*

D *Item D Note: Quantity 3/per on the Coil Bracket Welded Assembly (515-5939-00) in the Bumper Bottom Assembly (515-6459-04).*

A - D *Items A-D Note: The "Fins" keep the screw from turning inside the wood hole.*

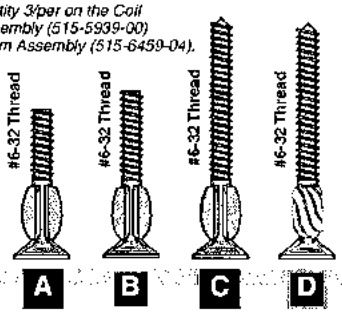

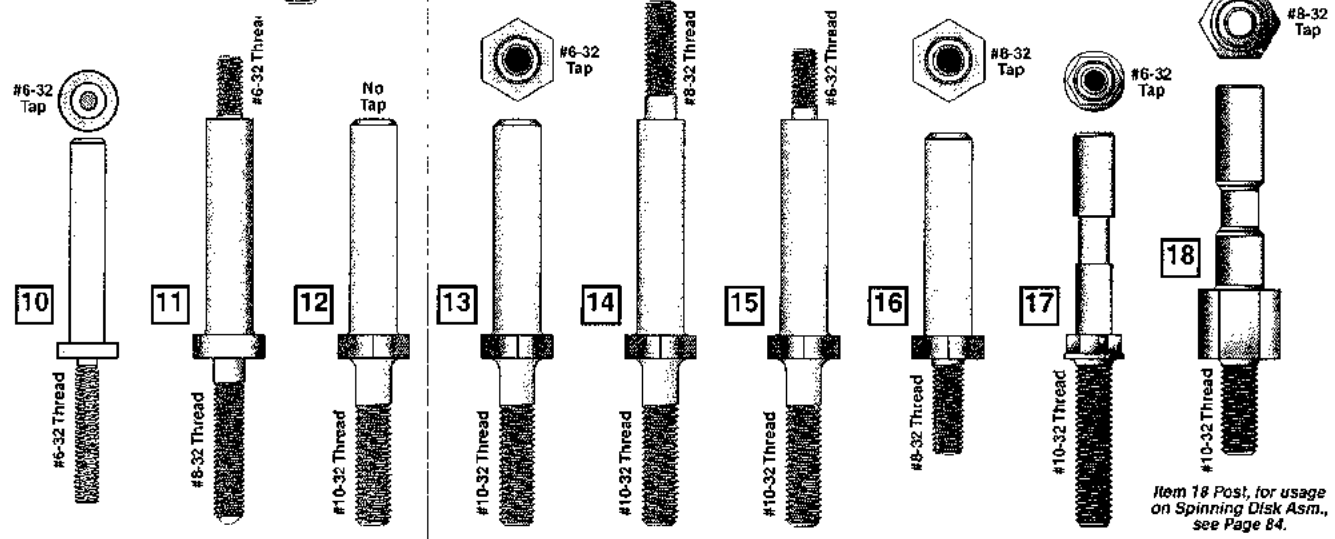

Item 18 Post, for usage on Spinning Disk Asm., see Page 84.

Nr.	METAL POSTS	SPI PART Nr.
1	Post [Fasten] #6-32 Thread // Wood Screw	530-5010-02
2	Post [Fasten] #6-32 Thread // #6-32 Thread	530-5012-02
3	Post [Fasten] #8-32 Thread // #6-32 Thread	530-5008-00
4	Post Brass [Adjustable, Sliding] #8-32 Thread	530-5621-00
5	Mini-Post Wood Screw (no cut-away)	530-5004-01
6	Mini-Post Wood Screw	530-5004-00
7	Mini-Post Machine Scr. // #10-32 .4" Thread	530-5005-01
8A	Mini-Post MS // #10-32 .875" Thread	530-5005-00
8B	Mini-Post Short MS // #10-32 .875" Thread	530-5749-00
9	Post [Fasten] #6-32 Thread // Wood Screw	530-5263-01
10	Post #6-32 Tap // #6-32 Thread	530-5127-00
11	Post [Fasten] #6-32 Thread // #8-32 Thread	530-5007-00

Nr.	METAL POSTS	SPI PART Nr.
12	Post [Hex Base] NO TAP // 10-32 Thread	530-5332-00
13	Post [Hex Bs.] #6-32 TAP // #10-32 Thread	530-5332-01
14	Post [Hex Bs.] #8-32 Thread // #10-32 Thr.	530-5332-02
15	Post [Hex Bs.] #6-32 Thread // #10-32 Thr.	530-5332-03
16	Post [Hex Bs.] #8-32 TAP // #8-32 Thread	530-5332-04
17	Post [Hex Bs.+Groove] #6-32 TAP // #10-32 Thr.	530-5679-00
18	Post [Hex Bs.+Groove] #8-32 TAP // #10-32 Thr.	530-5753-00

Nr.	FIN SHANK SCREWS	SPI PART Nr.
A	#6-32 X 3/4" Fin Shank Screw	237-5921-02
B	#6-32 X 7/8" Fin Shank Screw	237-5921-04
C	#6-32 X 1¼" Fin Shank Screw	237-5883-00
D	#6-32 X 13/16" Spiral Fin Shank Screw	237-5957-00

NOT ALL PARTS LISTED ABOVE ARE USED ON THIS GAME (QUANTITIES PER GAME WILL DIFFER). COMPARE ACTUAL PART ON GAME TO ABOVE DRAWINGS TO IDENTIFY THE PART NUMBER REQUIRED.

Playfield - Nylon Stop, KEPS, Hex, T-, Flange, Pal* & Wing Nuts* (Actual Size) †

Nr.	NYLON STOP NUTS*	SPI PART Nr.
N1	#6-32 Nylon Stop Nut	240-5005-00
N2	#6-32 N.S. Nut *(with ¼" Hex Body)*	240-5010-00
N3	#8-32 Nylon Stop Nut	240-5102-00
N4	#10-32 Nylon Stop Nut	240-5203-00
N5	#10-24 Nylon Stop Nut	240-5206-00

Item N5 used with #10-24 X 1-3/4" Carriage Bolt Square Neck Black (231-5022-00) located in the Cabinet for the Roto Lock (Male) (355-5006-01).

N6	#4-40 Nylon Stop Nut	240-5303-00
N7	#4-40 *(18/8 Stainless)* Nylon Stop Nut	240-5303-01
N8	5/16"-18 Nylon Stop Nut	240-5316-00

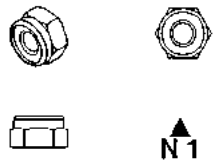

Nr.	KEPS NUTS*	SPI PART Nr.
K1	#6-32 Keps Nut *(with Star Washer)*	240-5008-00
K2	#6-32 Keps Nut *(with ¼" Hex Body)*	240-5011-00
K3	#8-32 Keps Nut	240-5104-00
K4	#10-32 Keps Nut	240-5208-00
K5	#10-24 Keps Nut	240-5207-00
K6	#4-40 Keps Nut	240-5318-00

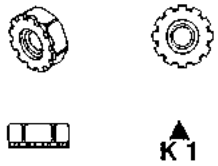

Nr.	HEX NUTS*	SPI PART Nr.
H1	#6-32 Hex Nut *(No Star Washer)*	240-5004-00
H2	#8-32 Hex Nut	240-5103-00
H3	#10-32 Hex Nut	240-5201-00
H4	#10-24 Hex Nut	240-5202-00

Item H4 used with #10-24 X 1" Carriage Bolt Square Neck Black (231-5021-00) located in the Cabinet for the Side Armor Rear (towards Backbox).

H5	#10-32 X ⅜" Hex Nut	240-5209-00
H6	¾-16 Hex Nut	240-5315-00
H7	#2-56 Hex Nut	240-5301-00
H8	⅞"-14 Hex Nut	240-5317-00

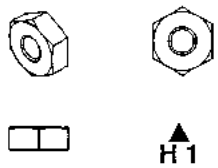

Nr.	T-NUTS*	SPI PART Nr.
T1	#6-32 T-Nut	240-5002-00
T2	#6-32 T-Nut *(with Side Cut Off)*	240-5002-01
T3	#8-32 T-Nut	240-5101-00
T4	#10-32 *(Black Oxide)* T-Nut	240-5007-00
T5	#10-32 T-Nut *(with Side Cut Off)*	240-5205-00
T6	#10-32 X 5/16" 3-Prong T-Nut	240-5204-00
T7	#10-24 T-Nut	240-5200-00

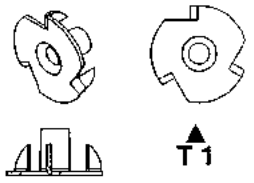

Nr.	FLANGE NUT*	SPI PART Nr.
F1	¼" X 20 Flange Nut	240-5300-00

Item F1 used with 1/4-20 X 1-1/4 Sq. Neck Carriage Bolt Black (231-5003-00) located in the Cabinet for the Side Armor (Front) and Pivot Hinges.

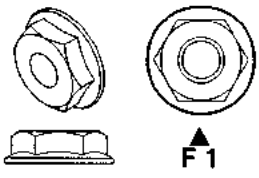

Nr.	PAL NUTS*	SPI PART Nr.
P1	Plastic Pal Nut *(on Flipper Buttons)*	240-5003-00
P2	Metal Pal Nut *(on Flipper Buttons)*	240-5003-01

* *Not Shown*

Nr.	WING NUTS*	SPI PART Nr.
W1	#6-32 Wing Nut	240-5001-00
W2	#8-32 Wing Nut	240-5100-00
W3	#10-24 Wing Nut	240-5211-00
W4	¼"-20 Wing Nut	240-5302-00
W5	¼"-20 Toggle Wing	240-5324-00

* *Not Shown*

NOT ALL PARTS LISTED ABOVE ARE USED ON THIS GAME (QUANTITIES PER GAME WILL DIFFER). COMPARE ACTUAL PART ON GAME TO ABOVE DRAWINGS TO IDENTIFY THE PART NUMBER REQUIRED.

Playfield Top - Hex Spacers (Actual Size) †

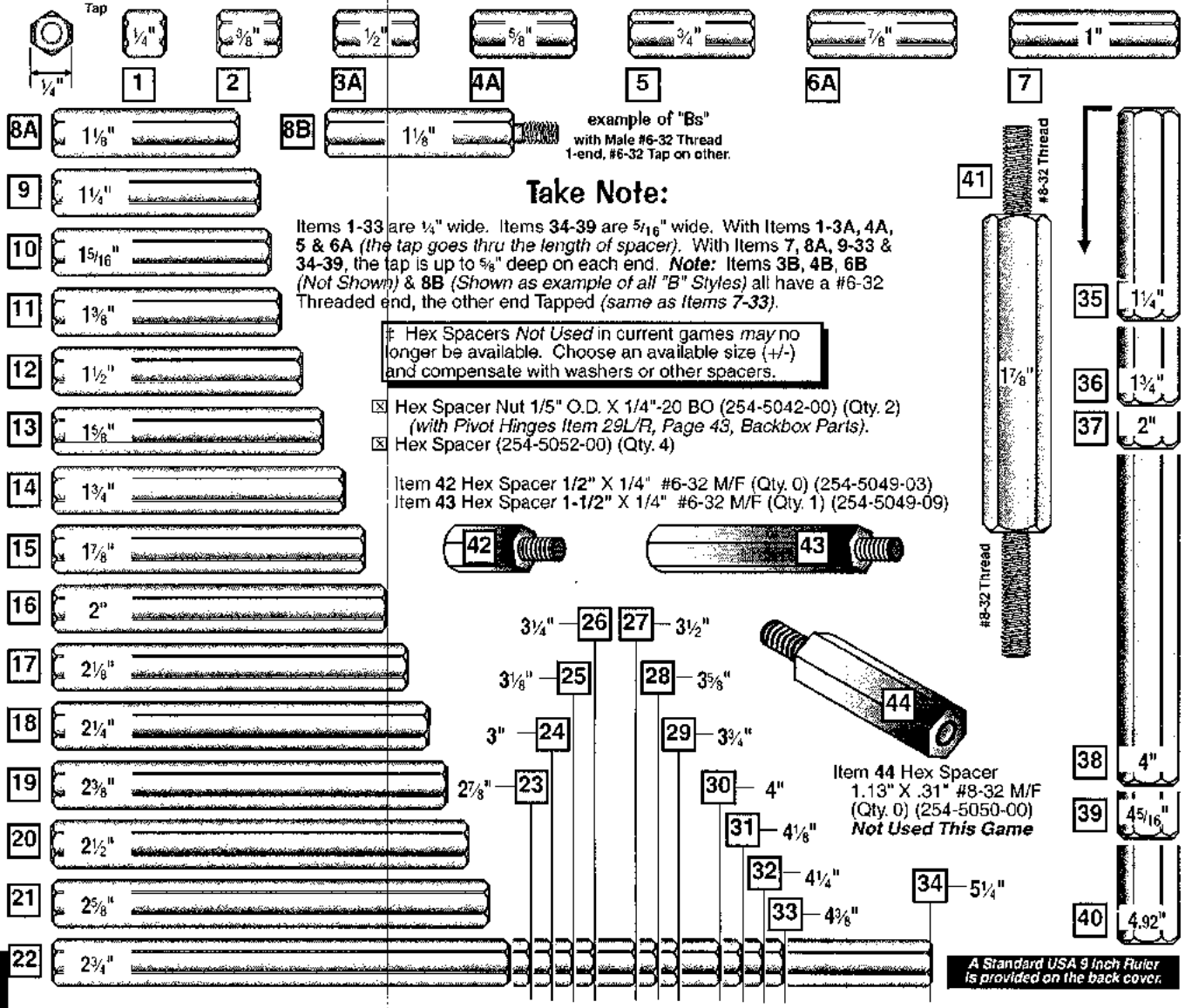

Take Note:

Items **1-33** are ¼" wide. Items **34-39** are ⁵⁄₁₆" wide. With Items **1-3A, 4A, 5 & 6A** *(the tap goes thru the length of spacer)*. With Items **7, 8A, 9-33 & 34-39**, the tap is up to ⅝" deep on each end. ***Note:*** Items **3B, 4B, 6B** *(Not Shown)* & **8B** *(Shown as example of all "B" Styles)* all have a #6-32 Threaded end, the other end Tapped *(same as Items 7-33)*.

‡ Hex Spacers *Not Used* in current games *may* no longer be available. Choose an available size (+/-) and compensate with washers or other spacers.

☒ Hex Spacer Nut 1/5" O.D. X 1/4"-20 BO (254-5042-00) (Qty. 2) *(with Pivot Hinges Item 29L/R, Page 43, Backbox Parts).*
☒ Hex Spacer (254-5052-00) (Qty. 4)

Item **42** Hex Spacer **1/2"** X 1/4" #6-32 M/F (Qty. 0) (254-5049-03)
Item **43** Hex Spacer **1-1/2"** X 1/4" #6-32 M/F (Qty. 1) (254-5049-09)

Item **44** Hex Spacer 1.13" X .31" #8-32 M/F (Qty. 0) (254-5050-00) ***Not Used This Game***

A Standard USA 9 Inch Ruler is provided on the back cover.

Nr.	HEX SPACERS	SPI PART Nr.	Nr.	HEX SPACERS	SPI PART Nr.
1	¼" X ¼" : #6-32 Tap *(both ends)*	254-5008-00	19	2⅜" X ¼" : #6-32 Tap *(both ends)*	254-5008-28
2	⅜" X ¼" : #6-32 Tap *(both ends)*	254-5008-12	20	2½" X ¼" : #6-32 Tap *(both ends)*	254-5008-16
3A	½" X ¼" : #6-32 Tap *(both ends)*	254-5008-03	21	2⅝" X ¼" : #6-32 Tap *(both ends)*	254-5008-08
3B*	Identical to **3A** *with #6-32 Thread end*	254-5024-03	22	2¾" X ¼" : #6-32 Tap *(both ends)*	254-5008-15
4A	⅝" X ¼" : #6-32 Tap *(both ends)*	254-5008-02	23	2⅞" X ¼" : #6-32 Tap *(both ends)*	254-5008-31
4B*	Identical to **4A** *with #6-32 Thread end*	254-5024-02	24	3" X ¼" : #6-32 Tap *(both ends)*	254-5008-14
5	¾" X ¼" : #6-32 Tap *(both ends)*	254-5008-04	25	3⅛" X ¼" : #6-32 Tap *(both ends)*	254-5008-19
6A	⅞" X ¼" : #6-32 Tap *(both ends)*	254-5008-05	26	3¼" X ¼" : #6-32 Tap *(both ends)*	254-5008-26
6B*	Identical to **6A** *with #6-32 Thread end*	254-5024-05	27	3½" X ¼" : #6-32 Tap *(both ends)*	254-5008-27
7	1" X ¼" : #6-32 Tap *(both ends)*	254-5008-06	28	3⅝" X ¼" : #6-32 Tap *(both ends)*	254-5008-25
8A	1⅛" X ¼" : #6-32 Tap *(both ends)*	254-5008-17	29	3¾" X ¼" : #6-32 Tap *(both ends)*	254-5008-36
8B	Identical to **8A** *with #6-32 Thread end*	254-5024-17	30	4" X ¼" : #6-32 Tap *(both ends)*	254-5008-21
9	1¼" X ¼" : #6-32 Tap *(both ends)*	254-5008-11	31	4⅛" X ¼" : #6-32 Tap *(both ends)*	254-5008-23
10	1⁵⁄₁₆" X ¼" : #6-32 Tap *(both ends)*	254-5008-34	32	4¼" X ¼" : #6-32 Tap *(both ends)*	254-5008-30
11 ‡	1⅜" X ¼" : #6-32 Tap *(both ends)*	254-5008-33	33	4⅜" X ¼" : #6-32 Tap *(both ends)*	254-5008-29
12	1½" X ¼" : #6-32 Tap *(both ends)*	254-5008-09	34	5¼" X ¼" : #6-32 Tap *(both ends)*	254-5008-35
13 ‡	1⅝" X ¼" : #6-32 Tap *(both ends)*	254-5008-13	35	1¼" X ⁵⁄₁₆" : #6-32 Tap *(both ends)*	254-5018-09
14	1¾" X ¼" : #6-32 Tap *(both ends)*	254-5008-10	36	1¾" X ⁵⁄₁₆" : #6-32 Tap *(both ends)*	254-5018-06
15 ‡	1⅞" X ¼" : #6-32 Tap *(both ends)*	254-5008-20	37	2" X ⁵⁄₁₆" : #6-32 Tap *(both ends)*	254-5018-07
16	2" X ¼" : #6-32 Tap *(both ends)*	254-5008-07	38	4" X ⁵⁄₁₆" : #6-32 Tap *(both ends)*	254-5018-03
17	2⅛" X ¼" : #6-32 Tap *(both ends)*	254-5008-32	39	4⁵⁄₁₆" X ⁵⁄₁₆" : #6-32 Tap *(both ends)*	254-5018-00
18	2¼" X ¼" : #6-32 Tap *(both ends)*	254-5008-18	40	4.92" X ⁵⁄₁₆" : #6-32 Tap *(both ends)*	254-5018-04

NOT ALL PARTS LISTED ABOVE ARE USED ON THIS GAME (QUANTITIES PER GAME WILL DIFFER). COMPARE ACTUAL PART ON GAME TO ABOVE DRAWINGS TO IDENTIFY THE PART NUMBER REQUIRED.

Playfield Top - Plastic Posts & Spacers & Metal Spacers (Actual Size) †

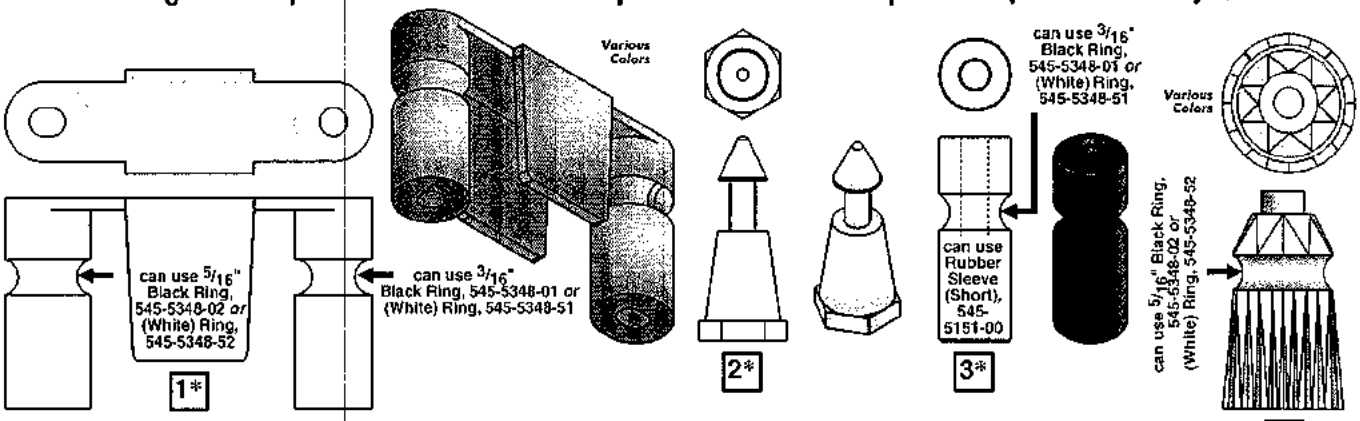

PLASTIC PART COLOR CHART

Nr.	Color	Nr.	Color	Nr.	Color
-00	Black	-06	Yellow	-12	Fluor. Blue
-01	Clear	-07	Orange	-13	Teal Green
-02	Red	-08	(White)	-14	(Gray)
-03	Amber	-09	Purple	-15	Luminescent
-04	Green	-10	Fluor. Org.	-16	Gold
-05	Blue	-11	Fluor. Green		

* Items 1 & 5 come in various colors. *The "-XX" (the last 2-Digits in the Part Number),* should be replaced with the desired 2-Digit number from the above Color Chart *(may not be available in every color; other colors used in prior games may no longer be available.) Call for availability.*

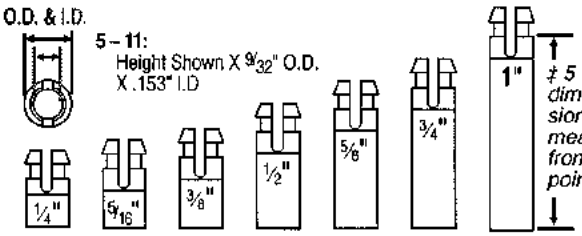

‡ *Items 5 through 11 dimensions are measured from bottom to just under the cut-away. Item 33 dimension is measured from top-to-top of curve. See pictorials with Items 11 & 33.*

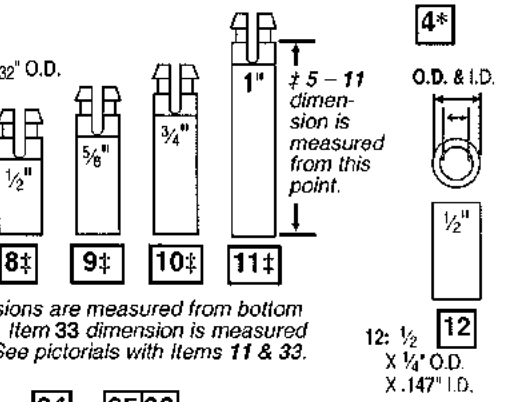

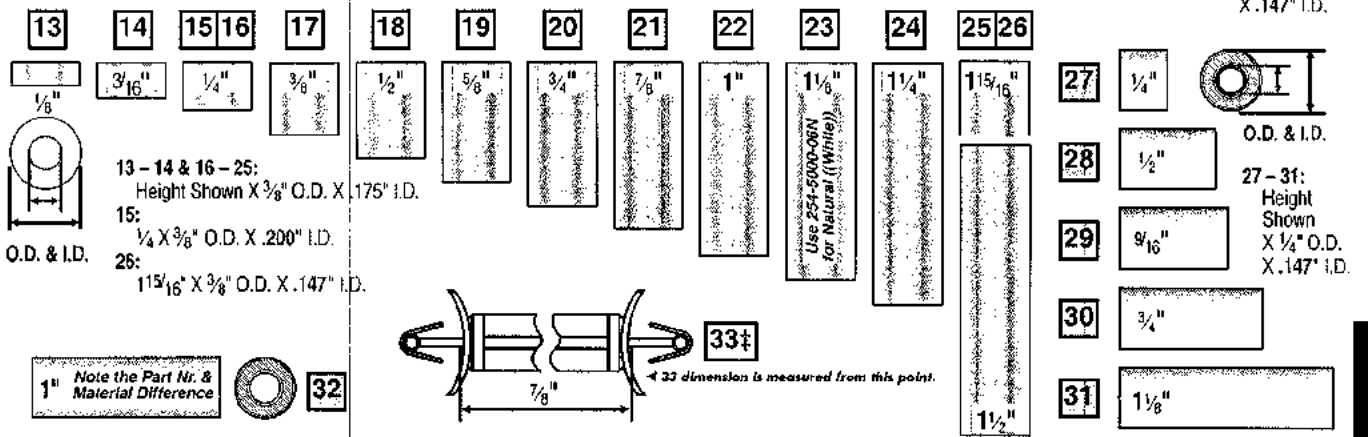

Nr.	PLASTIC POSTS & SPACERS	SPI PART Nr.
1**	Top Lane Plastic Mini-Lite Hood (XX-Color)	550-5061-XX
2**	Mini-Jewel Plastic Post (XX-Color)	550-5052-XX
3**	1 1/16" 1-Groove Plastic Post (XX-Color)	550-5059-XX
	Item 3 Only : Use Part Number (550-5059-00) for color Black.	
4**	1-Groove Jewel Plastic Post (XX-Color)	550-5034-XX
	Items 3 & 4 typically sec'd by: Post Fastening Scr. #6-32 Top / #6-32 Bot. (530-5012-02). *Use Color Chart above for last 2-digits. Not all colors are available.*	
	Items 1–4 Note: Use Color Chart above for last 2-digits. Not all colors are available.	
5 ‡	1/4" Self Retain. Plastic Spacer (White)	254-5007-02
6 ‡	9/16" Self Retain. Plastic Spacer (White)	254-5007-05
7 ‡	3/8" Self Retain. Plastic Spacer (White)	254-5007-01
8 ‡	1/2" Self Retain. Plastic Spacer (White)	254-5007-04
9 ‡	5/8" Self Retain. Plastic Spacer (White)	254-5007-00
10 ‡	3/4" Self Retain. Plastic Spacer (White)	254-5007-03
11 ‡	1" Self Retain. Plastic Spacer (White)	254-5007-06
12	1/2" X 1/4" O.D. X .147" I.D. Pls. Spacer (White)	254-5000-03
13	1/8" X 3/8" O.D. X .175" I.D. Pls. Spacer (Gray)	254-5000-19
14	3/16" X 3/8" O.D. X .175" I.D. Pls. Spcr. (Gray)	254-5000-18
15	1/4" X 3/8" O.D. X .200" I.D. Pls. Spcr. (Gray)	254-5000-02
16	1/4" X 3/8" O.D. X .175" I.D. Pls. Spacer (Gray)	254-5000-09
17	3/8" X 3/8" O.D. X .175" I.D. Pls. Spacer (Gray)	254-5000-12
18	1/2" X 3/8" O.D. X .175" I.D. Pls. Spacer (Gray)	254-5000-01
19	5/8" X 3/8" O.D. X .175" I.D. Pls. Spacer (Gray)	254-5000-14
20	3/4" X 3/8" O.D. X .175" I.D. Pls. Spacer (Gray)	254-5000-07

Nr.	PLASTIC POSTS & SPACERS	SPI PART Nr.
21	7/8" X 3/8" O.D. X .175" I.D. Pls. Spacer (Gray)	254-5000-11
22	1" X 3/8" O.D. X .175" I.D. Pls. Spacer (Gray)	254-5000-04
23	1 1/8" X 3/8" O.D. X .175" I.D. Pls. Spcr. (Gray)	254-5000-06
	Item 23 Only : Add the letter "N" for color Natural (if available) or "B" for color Black.	
24	1 1/4" X 3/8" O.D. X .175" I.D. Pls. Spcr. (Gray)	254-5000-05
25	1 1/2" X 3/8" O.D. X .175" I.D. Pls. Spcr. (Gray)	254-5000-08
26	1 15/16" X 3/8" O.D. X .147" I.D. Plastic Spacer (Gray)	254-5000-15
	Items 13-26 Only : Spacers may also be Black in color (random from vendor).	
	Not Shown and listed for reference only : 254-5000-10: 2 1/2" X 3/8" O.D. X .175" I.D. -13: 5/16" X 1/4" X .147"; -16: 5/16" X 5/16" X .190"; -17: 1 3/4" X 3/8" O.D. X .175" I.D.	
27	1/4" X 5/16" O.D. X .144" I.D. Metal Spacer	254-5014-03
28	1/2" X 5/16" O.D. X .144" I.D. Metal Spacer	254-5014-00
29	9/16" X 5/16" O.D. X .144" I.D. Metal Spacer	254-5014-04
30	3/4" X 5/16" O.D. X .144" I.D. Metal Spacer	254-5014-01
31	1 1/8" X 5/16" O.D. X .144" I.D. Metal Spacer	254-5014-02
32	1" X 5/16" O.D. X .144" I.D. Metal Spacer	254-5001-00
33‡	7/8" Plastic Spacer Support *(Dual-Locking)*	254-5039-14
34	Plastic Spacer, .5" Plastic Mounting	254-5054-00
35	Plastic Spacer, 1.13" Plastic Mounting	254-5054-01

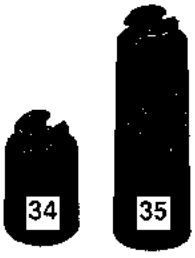

NOT ALL PARTS LISTED ABOVE ARE USED ON THIS GAME (QUANTITIES PER GAME WILL DIFFER). COMPARE ACTUAL PART ON GAME TO ABOVE DRAWINGS TO IDENTIFY THE P/N REQUIRED.

Parts Identification

Playfield - Rubber Parts Black ■, White □ & Blue ■ (Rings Actual Size) †

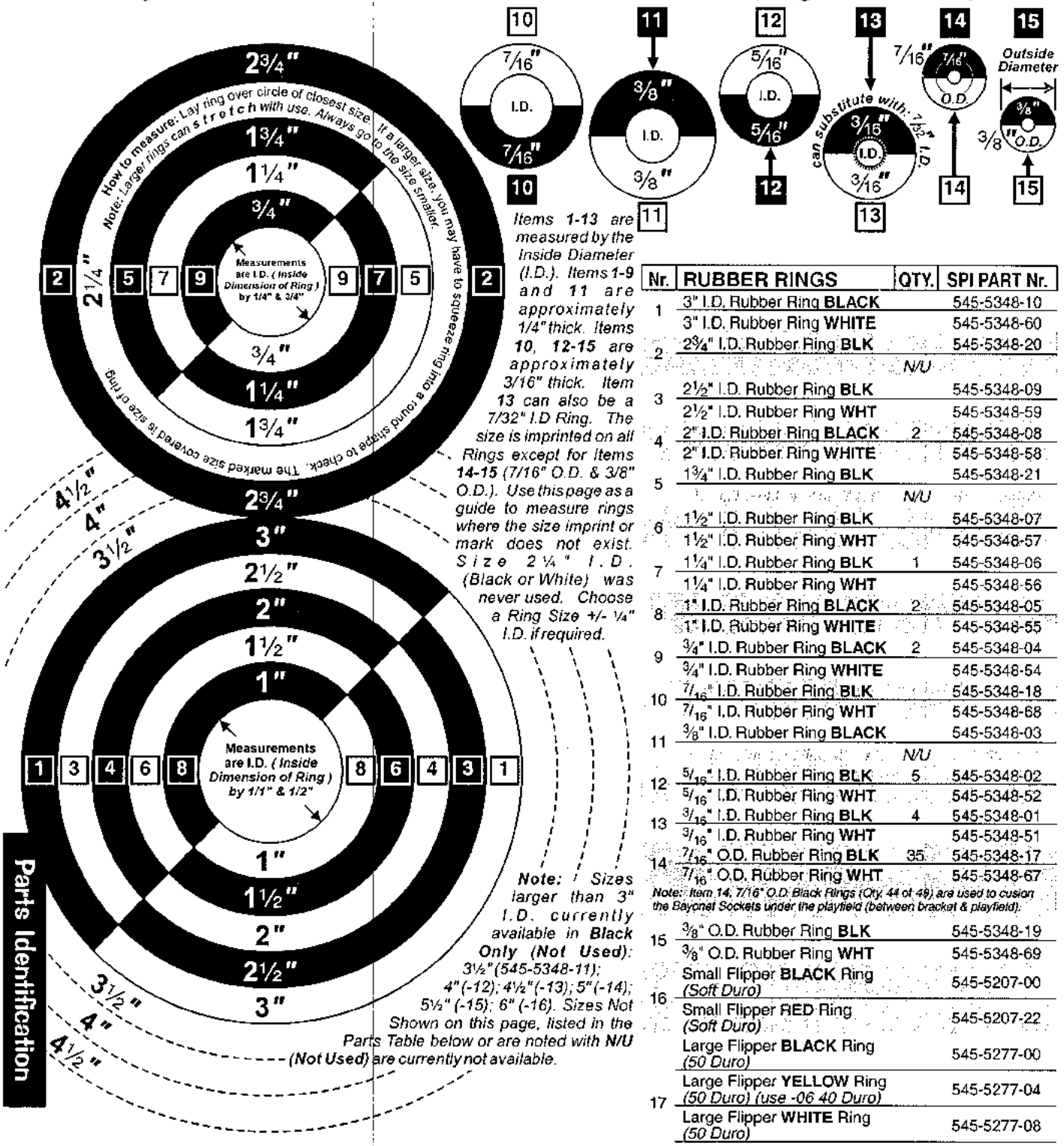

Items 1-13 are measured by the Inside Diameter (I.D.). Items 1-9 and 11 are approximately 1/4" thick. Items 10, 12-15 are approximately 3/16" thick. Item 13 can also be a 7/32" I.D Ring. The size is imprinted on all Rings except for Items 14-15 (7/16" O.D. & 3/8" O.D.). Use this page as a guide to measure rings where the size imprint or mark does not exist. Size 2¼" I.D. (Black or White) was never used. Choose a Ring Size +/- ¼" I.D. if required.

***Note:** Sizes larger than 3" I.D. currently available in **Black Only (Not Used)**: 3½"(545-5348-11); 4"(-12); 4½"(-13); 5"(-14); 5½" (-15); 6" (-16). Sizes Not Shown on this page, listed in the Parts Table below or are noted with **N/U** (Not Used) are currently not available.*

Nr.	RUBBER RINGS	QTY.	SPI PART Nr.
1	3" I.D. Rubber Ring **BLACK**		545-5348-10
	3" I.D. Rubber Ring **WHITE**		545-5348-60
2	2¾" I.D. Rubber Ring **BLK**		545-5348-20
		N/U	
3	2½" I.D. Rubber Ring **BLK**		545-5348-09
	2½" I.D. Rubber Ring **WHT**		545-5348-59
4	2" I.D. Rubber Ring **BLACK**	2	545-5348-08
	2" I.D. Rubber Ring **WHITE**		545-5348-58
5	1¾" I.D. Rubber Ring **BLK**		545-5348-21
		N/U	
6	1½" I.D. Rubber Ring **BLK**		545-5348-07
	1½" I.D. Rubber Ring **WHT**		545-5348-57
7	1¼" I.D. Rubber Ring **BLK**	1	545-5348-06
	1¼" I.D. Rubber Ring **WHT**		545-5348-56
8	1" I.D. Rubber Ring **BLACK**	2	545-5348-05
	1" I.D. Rubber Ring **WHITE**		545-5348-55
9	¾" I.D. Rubber Ring **BLACK**	2	545-5348-04
	¾" I.D. Rubber Ring **WHITE**		545-5348-54
10	7/16" I.D. Rubber Ring **BLK**		545-5348-18
	7/16" I.D. Rubber Ring **WHT**		545-5348-68
11	3/8" I.D. Rubber Ring **BLACK**		545-5348-03
		N/U	
12	5/16" I.D. Rubber Ring **BLK**	5	545-5348-02
	5/16" I.D. Rubber Ring **WHT**		545-5348-52
13	3/16" I.D. Rubber Ring **BLK**	4	545-5348-01
	3/16" I.D. Rubber Ring **WHT**		545-5348-51
14	7/16" O.D. Rubber Ring **BLK**	35	545-5348-17
	7/16" O.D. Rubber Ring **WHT**		545-5348-67
	Note: Item 14, 7/16" O.D. Black Rings (Qty. 44 of 48) are used to cusion the Bayonet Sockets under the playfield (between bracket & playfield).		
15	3/8" O.D. Rubber Ring **BLK**		545-5348-19
	3/8" O.D. Rubber Ring **WHT**		545-5348-69
16	Small Flipper **BLACK** Ring *(Soft Duro)*		545-5207-00
	Small Flipper **RED** Ring *(Soft Duro)*		545-5207-22
17	Large Flipper **BLACK** Ring *(50 Duro)*		545-5277-00
	Large Flipper **YELLOW** Ring *(50 Duro) (use -06 40 Duro)*		545-5277-04
	Large Flipper **WHITE** Ring *(50 Duro)*		545-5277-08
	Large Flipper **RED** Ring *(Soft Duro)*	2	545-5277-22

Take Note:

For Blue Rubber Pads, see the next page and/or the Blue Pages for the assembly the pads are found on for the part number.

Nr.	RUBBER BUMPER PADS	QTY.	SPI PART Nr.
A*	Bumper **BLK** Pad (Lg. w/ grommet)	2	545-5428-00
	Item A are located on Flipper Assemblies. See next page for location.		
B*	Bumper **BLK** Pad (Sm. w/ grommet)	4	545-5105-00
	Item B are located on multiple assemblies. See next page for location.		

Nr.	RBR. BUMPER POST SLVS.	QTY.	SPI PART Nr.
D*	Bumper **BLACK** Post Sleeve (Tall)	3	545-5308-00-65
	Item D in RED use 545-5308-22; Item D in WHITE use 545-5308-08.		
E*	Bumper Post Sleeve (Short)		545-5151-00

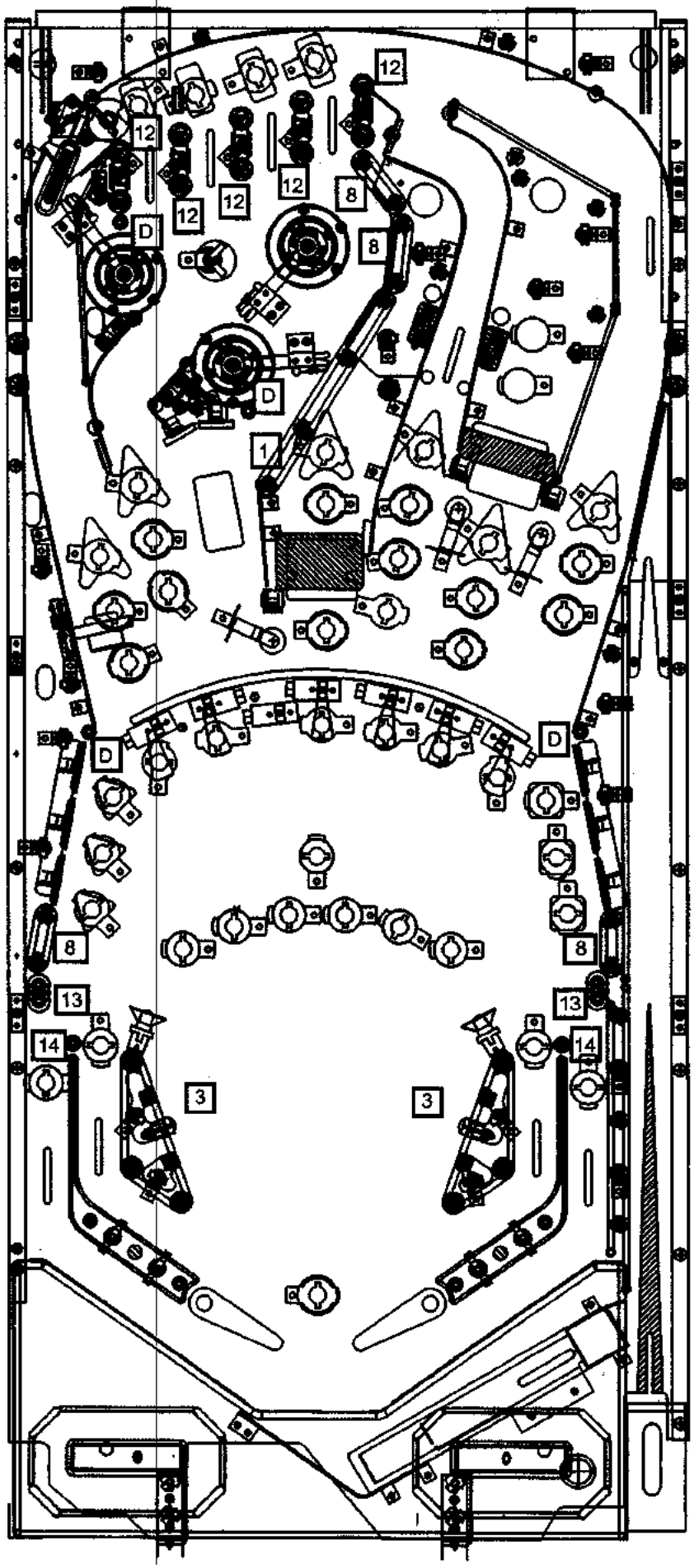
12
12
12
12
12
8
8
D
D
1
D
D
8
8
13
13
14
14
3
3

Playfield Top & Bottom - Small Bayonet Sockets & Bulbs ■ (Actual Size) †

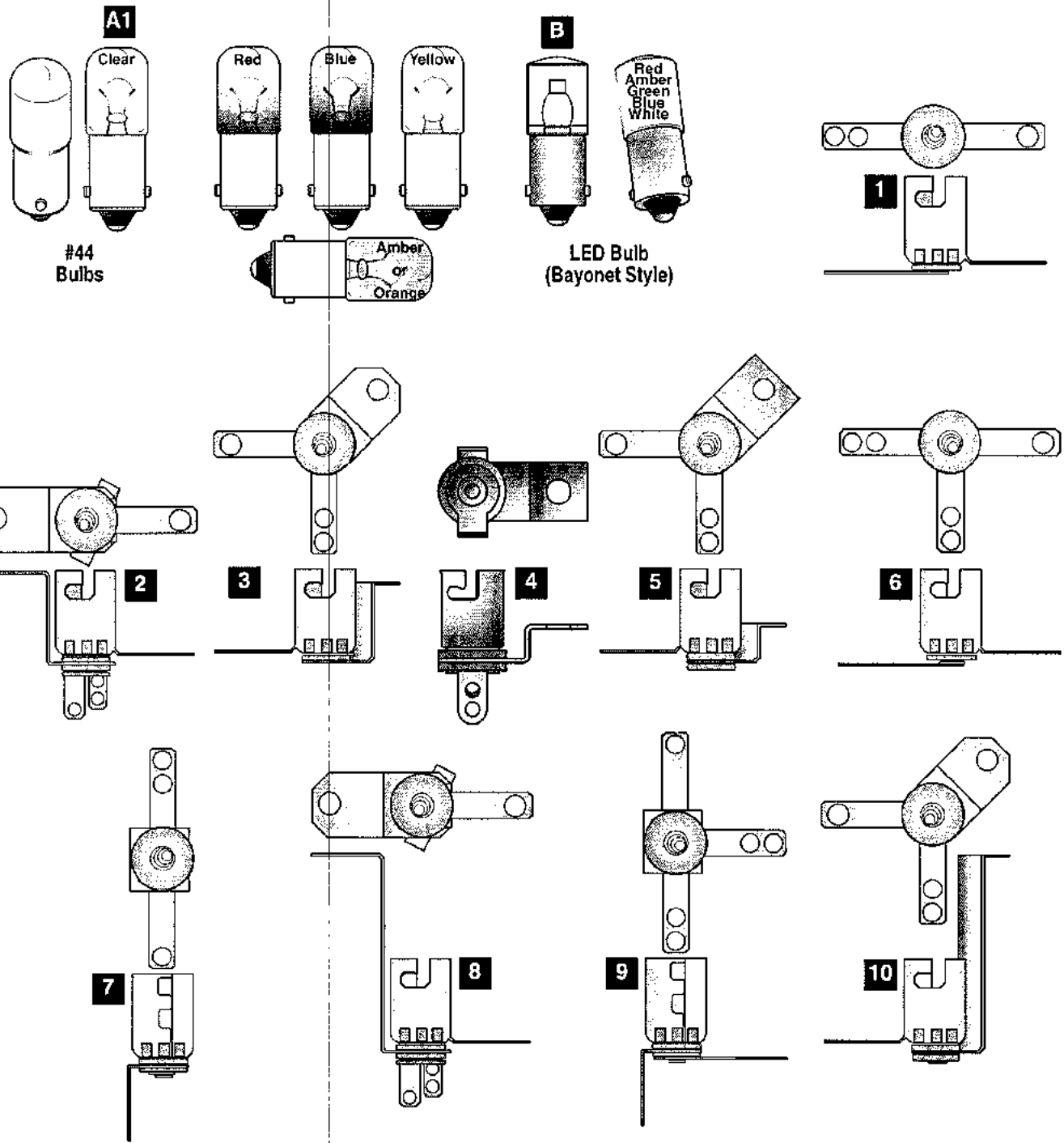

Nr.	BULBS (#44)	SPI PART Nr.
A	#44 Bulb (Clear) *Heavy Filament*	165-5000-44-HF
	#44 Bulb *(replace -XX w/color below)*	165-5053-XX-HF

Item A Note: Amber (165-5053-03-HF); Green (165-5053-04-HF); Yellow (165-5053-06-HF); Red (165-5053-02-HF); Blue (165-5053-05-HF); Orange (165-5053-07-HF)

Nr.	BULBS (LED & #455)	SPI PART Nr.
B	LED Module (WHT) (12.8v 20-25mA) Bynt.	112-5023-08

Item B Note: Different Colors may be available –
Red (112-5023-02); Amber (112-5023-03); Green (112-5023-04); Blue (112-5023-05);

Nr.	SMALL BAYONET SOCKETS	SPI PART Nr.
1	2-Lug Staple Down Socket	077-5000-00
2	3-Lug Stand-Up Socket (Med. Brkt.)	077-5008-00
3	2-Lug Stand-Up Socket (Med. Brkt.)	077-5002-00
4	2-Lug Stand-Up Socket (Short Brkt.)	077-5223-00
5	2-Lug Stand-Up Sckt. (Short Bracket)	077-5002-31
6	3-Lug Staple Down Socket	077-5001-00
7	2-Lug Laydown Socket	077-5003-00
8	3-Lug Stand-Up Socket (Tall Bracket)	077-5009-00

Nr.	SMALL BAYONET SOCKETS	SPI PART Nr.
9	3-Lug Laydown Socket (3 Lugs Flat)	077-5006-00
10	2-Lug Stand-Up Socket (Tall Bracket)	077-5005-00
11	3-Lug Stand-Up Long Shell Socket	077-5013-00
12	2-Lug Stand-Up Lg. Shell Socket (GIs)	077-5031-00
13	1-Lug S-U Lg. Shell Sckt. (Med. Brkt.)	077-5012-00
14	3-Lug S-U Lg. Shell Sckt. (45° Brkt.)	077-5035-00
15	3-Lug Laydown Socket (2 Lugs Bent)	077-5032-00

NOT ALL PARTS LISTED ABOVE ARE USED ON THIS GAME (QUANTITIES PER GAME WILL DIFFER). COMPARE ACTUAL PART ON GAME TO ABOVE DRAWINGS TO IDENTIFY THE PART NUMBER REQUIRED.

Playfield Top & Bot. - Small Bayonet Sockets & Bulbs ■ (Actual Size) † Continued

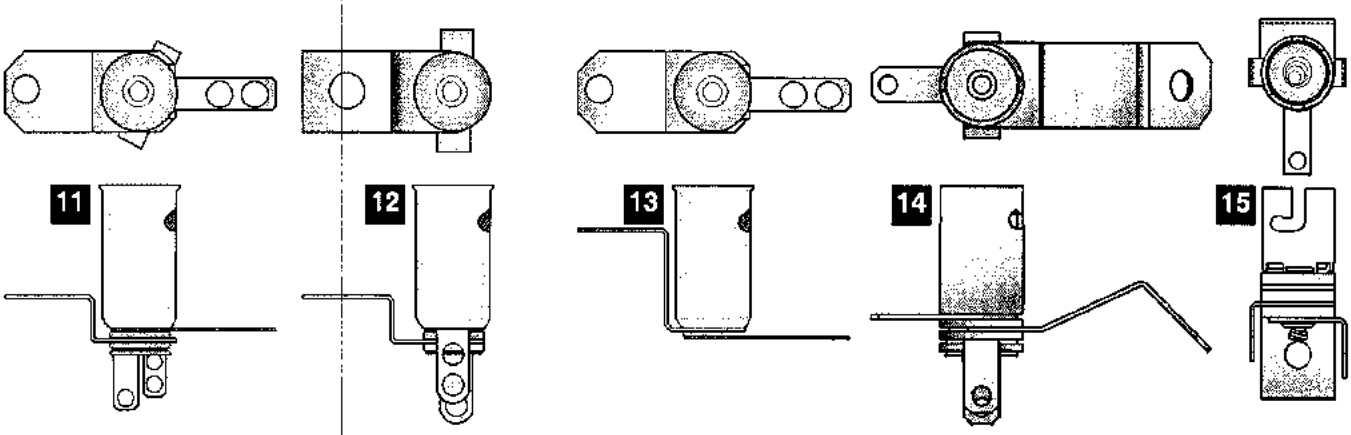

Playfield Bottom - Large Bayonet Sockets & Bulbs ■ (Actual Size) †

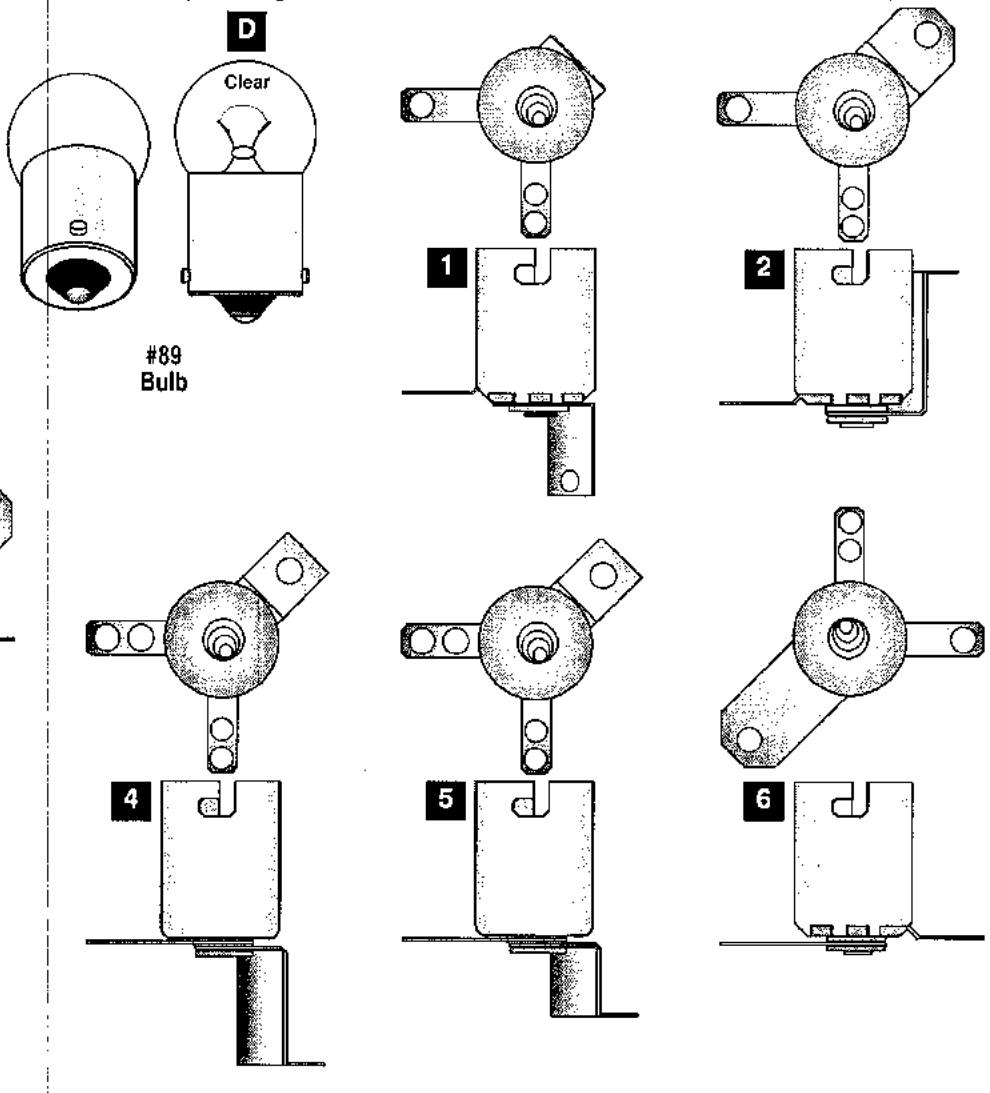

Nr.	BULBS (#89)	SPI PART Nr.
D	#89 Bulb *Heavy Filament*	165-5000-89-HF

Nr.	LARGE BAYONET SOCKETS	SPI PART Nr.
1	2-Lug Laydown Standard Socket	077-5100-00
2	2-Lug Stand-Up Short Socket	077-5101-00
3	2-Lug Stand-Up Long Socket	077-5102-00
4	2-Lug Stand-Up Rev. Mount Socket	077-5103-00
5	2-Lug Stand-Up Rv. Mnt. Short Socket	077-5106-00
6	2-Lug Straight Leg Socket	077-5107-00

NOT ALL PARTS LISTED ABOVE ARE USED ON THIS GAME (QUANTITIES PER GAME WILL DIFFER). COMPARE ACTUAL PART ON GAME TO ABOVE DRAWINGS TO IDENTIFY THE PART NUMBER REQUIRED.

POWER REQUIREMENTS

This game ***must be connected to a properly grounded outlet to reduce shock hazard*** *and* insure proper game operation. *See the Yellow Pages (Schematics & Wiring), for transformer connections required for* ***Normal***, ***High***, *and* ***Low Line*** *conditions.*

Normal Line:	**110v AC - 125v AC @ 60Hz**	
Domestic use an 8AMP 250v Slo-Blo Fuse.	**AVG OPERATION** CURRENT: **2.8AMP** WATTAGE: **329W**	**MAX OPERATION** CURRENT: **8AMP** WATTAGE: **940W**
High Line:	**218v AC - 240v AC @ 50Hz**	
Export use 2x 5AMP 250v Slo-Blo Fuses. (*England & Hong Kong use an 8AMP 250v S/B Fuse.)	**AVG OPERATION** CURRENT: **1.8AMP** WATTAGE: **412W**	**MAX OPERATION** CURRENT: **5AMP** | **8AMP*** (England & Hong Kong use an 8A Fuse.) WATTAGE: **1145W** | **1832W***
Low Line:	**95v AC - 108v AC @ 50Hz / 60Hz**	
Export Japan Only use an 8AMP 250v Slo-Blo Fuse.	**AVG OPERATION** CURRENT: **2.6AMP** WATTAGE: **264W**	**MAX OPERATION** CURRENT: **8AMP** WATTAGE: **812W**

GAME DIMENSIONS

The overall **Front / Back Height** dimensions include the **added 1"** with the ***Leg Levelers*** *turned all the way* ***in.***

** **PLEASE NOTE:** The **TOURNMENT PLAY** Sign or* ***betaBRITE Color Dot Display*** *will add up to 4⅜" **to the overall Back Height for a total of 79⅝".***

Ceiling Height Requirement:
↻ *An additional* ***1 ½"*** *is required for the rotation (↻) of the Backbox to the upright position.*
The complete Back Height required with Sign *or* **Dot Display and rotation: 81"**

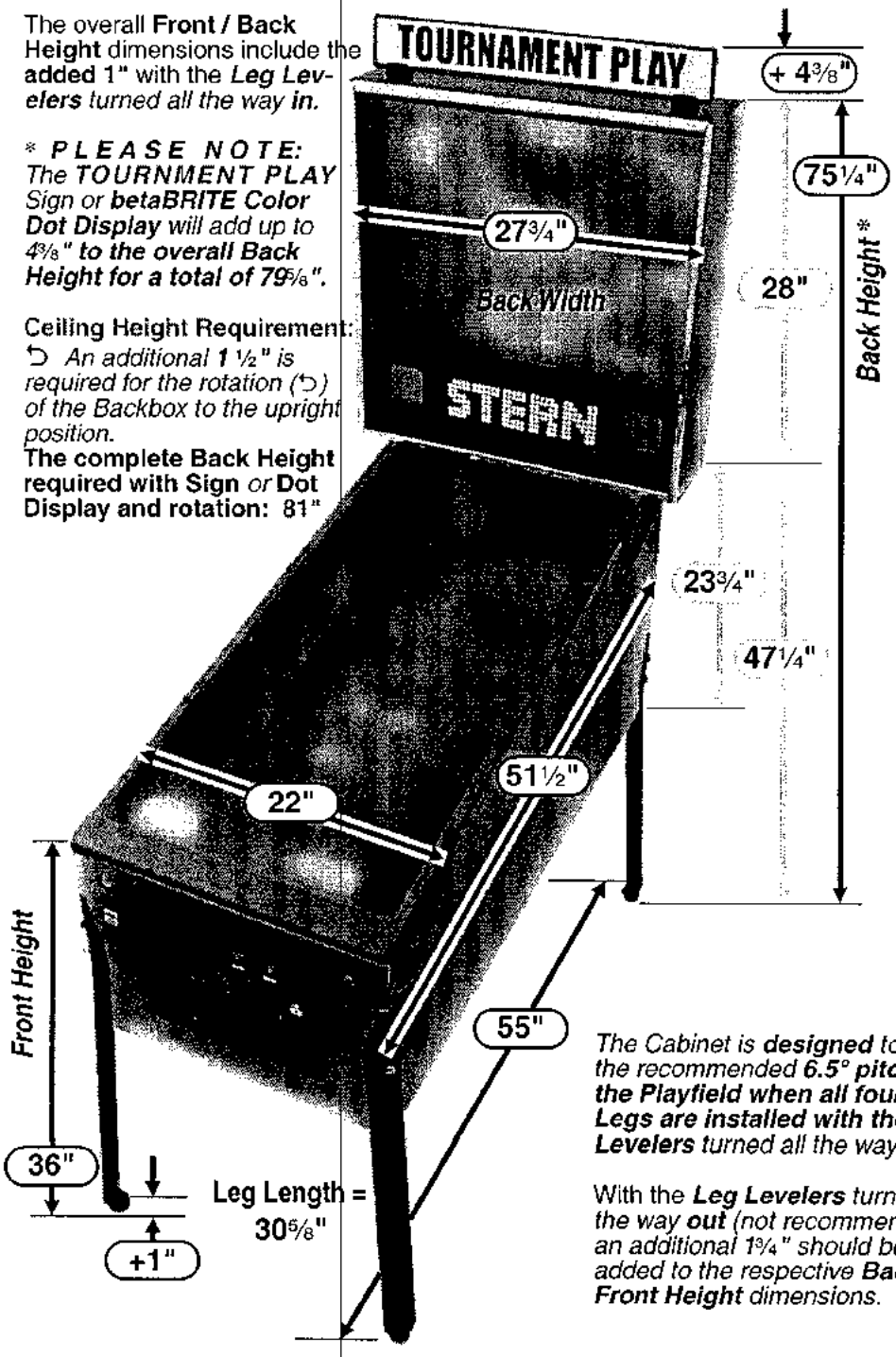

The Cabinet is ***designed*** *to give the recommended* ***6.5° pitch to the Playfield when all four (4) Legs are installed with the Leg Levelers*** *turned all the way* ***in.***

With the ***Leg Levelers*** *turned all the way* ***out*** *(not recommended), an additional 1¾" should be added to the respective* ***Back*** *or* ***Front Height*** *dimensions.*

TRANSPORTATION

BEFORE TRANSPORTING

To reduce the possibility of damage, observe ALL precautions whenever transporting the game.

Read & follow *the next page on* ***How to Secure the Backbox for Transporting.*** *Remove the legs and secure the game within the transporting vehicle.*

SAVE AND RETAIN ALL PRINTED INFORMATION INSIDE THE CABINET !

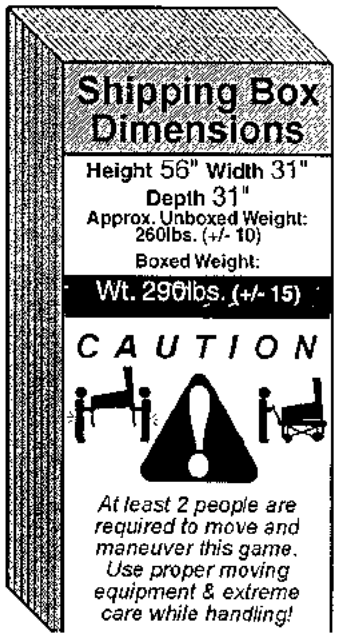

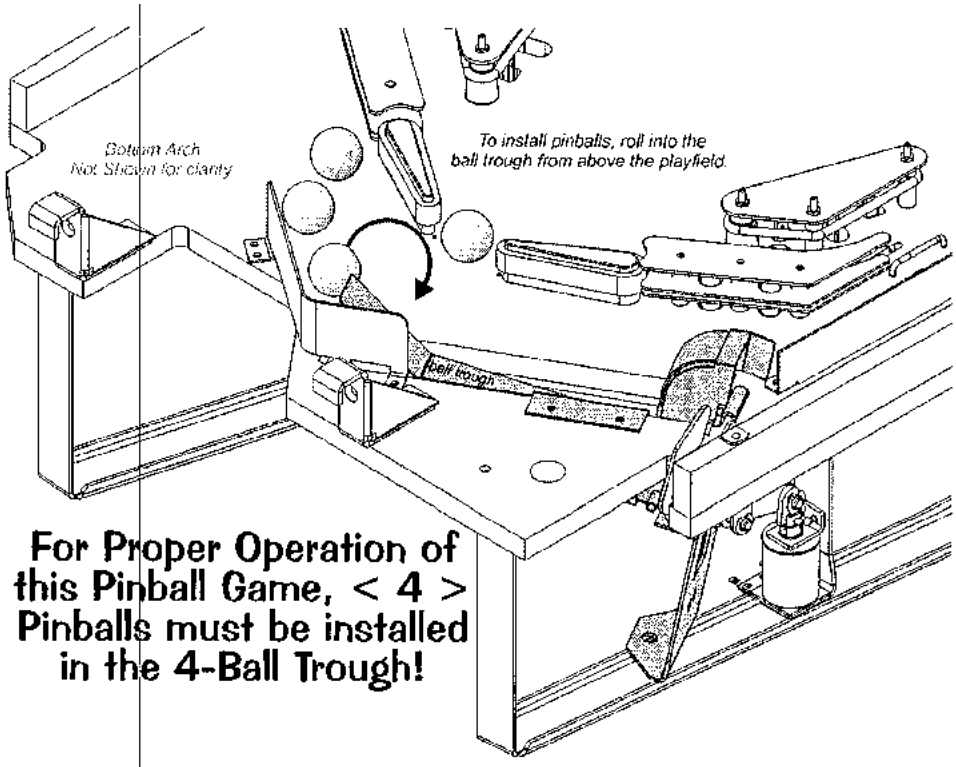

For Proper Operation of this Pinball Game, < 4 > Pinballs must be installed in the 4-Ball Trough!

Backbox Fuses*, Cabinet Fuses, Playfield Fuses and Cabinet Switches

***Note:** *The CPU/Sound PCB does not have fuses.*

QUICK REFERENCE FUSE CHART

3/4A S.B. 200-5000-17 | 3A S.B. 200-5000-08 | 4A S.B. 200-5000-03 | 5A S.B. 200-5000-01 | 7A S.B. 200-5000-03 | 8A S.B. 200-5000-05

BACKBOX FUSES

I/O POWER DRIVER BOARD

with RED LED STATUS INDICATORS (if any RED LED is OFF, check the fuse)

F1	5A S.B.	5.7VAC~G.I. Lamps (BROWN-WHITE⇆WHT-BRN)
F2	5A S.B.	5.7VAC~G.I. Lamps (YELLOW⇆WHITE-YEL Circuit)
F3	5A S.B.	5.7VAC~G.I. Lamps (GREEN⇆WHITE-GRN Circuit)
F4	5A S.B.	5.7VAC~G.I. Lamps (VIOLET⇆WHITE-VIO Circuit)
F5	7A S.B.	50VDC Coils / Flippers (43VAC *feed to* BRDG 1)
F6	3A S.B.	24VAC~ Motor or *Special Application*
F7	4A S.B.	50VDC Magnet(s) or *Special Application*
F8	3A S.B.	50VDC Coils
F9	8A S.B.	18VDC Control Lamps (13VAC *feed to* BRDG 4)
F10	5A S.B.	20VDC Coils / Flashers (16VAC *feed to* BRDG 2)
F11	4A S.B.	5VDC Logic Power (8VAC *feed to* BRDG 5)
F12	5A S.B.	12VDC Audio (19VAC *feed to* BRDG 3)
F13	5A S.B.	12VDC Audio (19VAC *feed to* BRDG 3)

DISPLAY POWER SUPPLY BOARD

F1	3/4A S.B.	90VDC High Voltage Dot Display Board

CABINET FUSES

POWER (SERVICE OUTLET) BOX

(Access through Coin Door inside cabinet, front bottom)

8A S.B.	110-120V Main Line *US / Canada / Japan*
5A S.B.	220-240V Main Line *International*

PLAYFIELD FUSES

FLIPPER OR SPECIAL APPLICATION

(Coil Fuses are located under the playfield near assembly.)

3A S.B.	50VDC R. Flipper (BLU-YEL⇆RED-YEL)
3A S.B.	50VDC L. Flipper (GRY-YEL⇆RED-YEL)
3A S.B.	50VDC *Additional Flipper Coil, if used*
3A S.B.	50VDC *Spcl. Application Coil, if used*

For location & more details on fuses, see Sec. 5, Chp. 2.

ALL FUSES ARE 250V S.B. (SLO-BLO)
SEE FUSE OR TABLES FOR AMP RATING
CAUTION **: FOR CONTINUED PROTECTION AGAINST RISK OF FIRE, REPLACE ONLY WITH SAME TYPE FUSE WITH IDENTICAL ELECTRICAL RATING!**

Stern Pinball®, Inc. ©2008 820-5384-00 Rev. C

Inside Coin Door

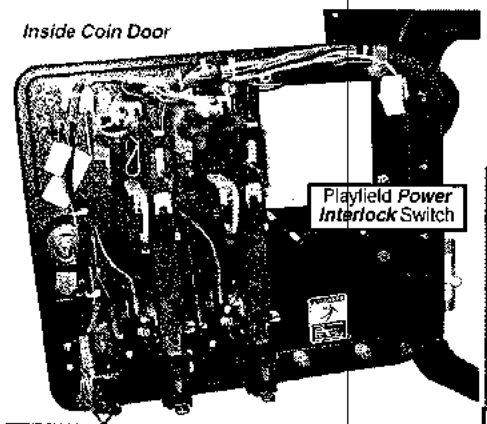

4-Button Switch Set:

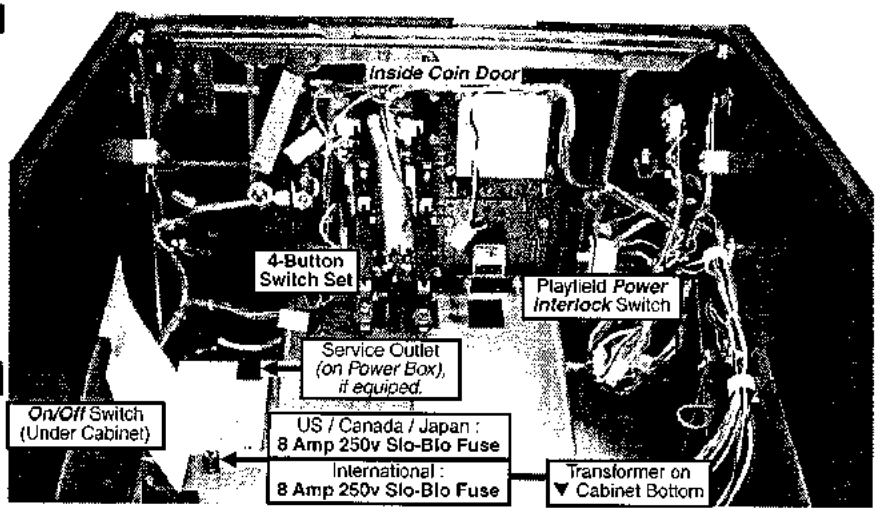

How to Secure the Backbox for Transporting

*For more Backbox details & part numbers, see the Pink Pages (**Parts Identification & Location, Backbox ...**).*

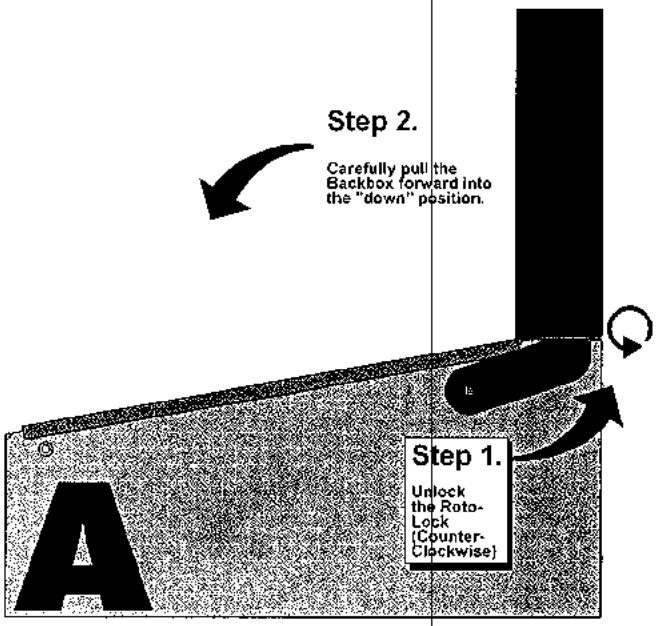

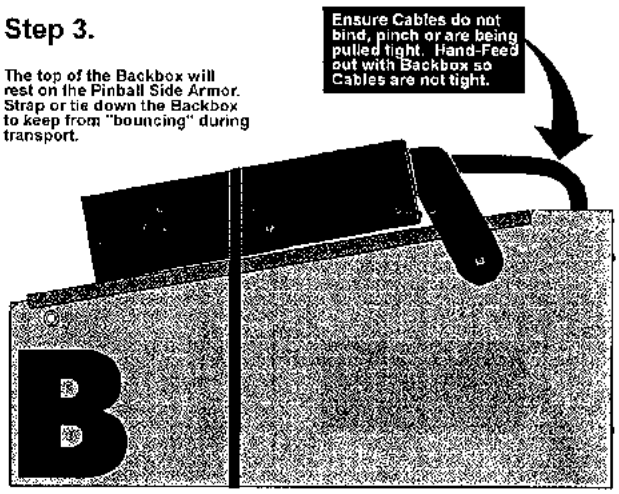

Leg Leveler Adjustment

Attach the four (4) Leg Assemblies to cabinet corners with the eight (8) leg bolts provided .

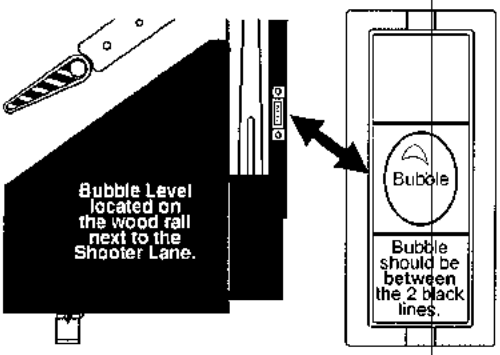

Start adjustment with the leg levelers *turned all the way in.*

View the *bubble* in the level provided on the right side wood rail.

Adjust the front or rear levelers as necessary to cause the bubble to float between the two (2) black lines.

Use a pinball to roll down the center of the playfield for side-to-side leveling.

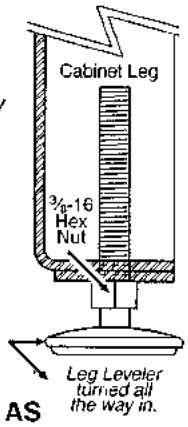

YOUR PLAYFIELD PITCH IS NOW AT 6.5° AS REQUIRED FOR PROPER GAME PLAY!

Note:** For custom adjustment greater than >6.5° can be achieved by turning out the rear leg leveler(s), however, **it is not recommended.

Easy Access Service System - 2 Positions

With the front molding & glass removed, carefully lift the playfield *(take care when using the Bottom Arch to hoist).*

Position 1

When lifted high enough, the ***Playfield Support Slide Brackets*** (**Fig. 1A**) can be seen and can clear the cabinet front (**Fig. 1B**). At this time, pull the playfield toward the front of the cabinet, checking that the mechanical components clear the cabinet front, then rest the playfield on the ***Playfield Support Slide Brackets*** at the front channel of cabinet (**Fig. 1C**);

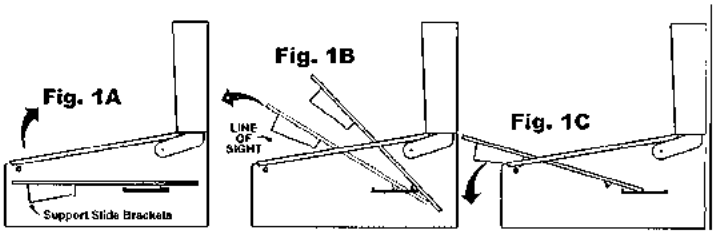

Position 2

With the playfield at rest, hold the sides & pull toward the front of the cabinet *(approx. 6" to 8")*, until resistance is felt from ***Edge Slide Brackets*** stopping against the ***Slide & Pivot Support Brackets*** located on either side of the cabinet (**Fig. 2A**). At this time, swivel the playfield toward the Backbox, then rest on the top edge (**Fig. 2B & 2C**).

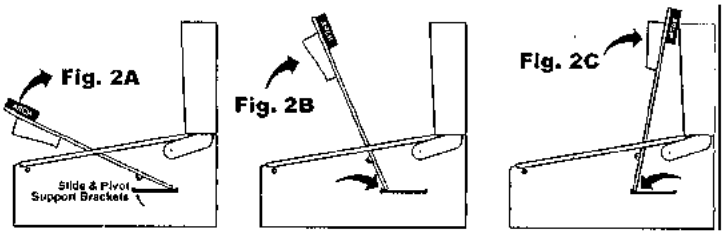

Service Switch X4 Set Access & Use

The **4-Button Service Switch Set** provides access for ***three (3) functions*** available for your use: **1: SERVICE CREDIT**, **2: VOLUME [–] / [+]** and **3: SERVICE MENU**.

▼ Service Switch X4 Set ▼

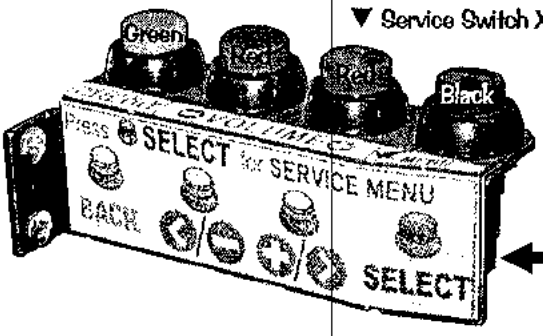

Inside Coin Door

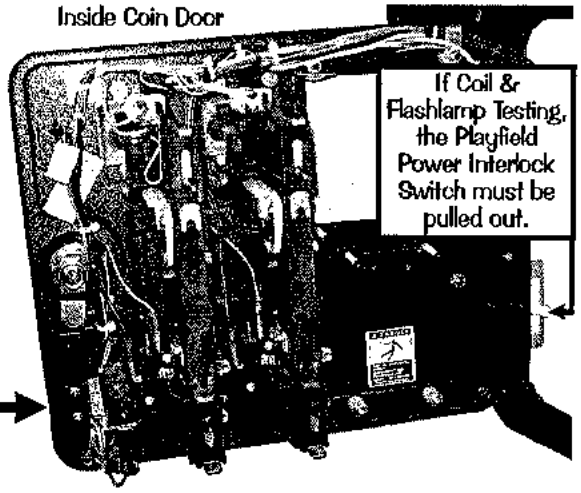

To access any of these ***three (3) functions*** you must first open the **Coin Door** *(see pictorial above)* with the Game in the ***Attract Mode*** *(not already in any Function or Menu stated below) and then follow below.*

Pushing the GREEN ***BUTTON*** *first.*

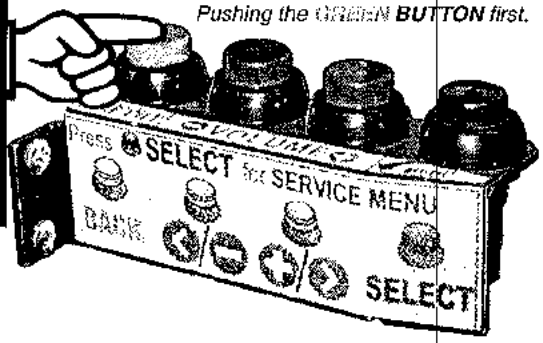

◀ Function 1: SERVICE CREDITS MENU

Pushing the **Green [SERVICE CREDIT] Button** first, adds a ***Service Credit*** per push *(will not affect your audits as "paid" credits).* This is useful for the technician to test games in regular play without affecting the game audits. Each depression adds **1 credit**; up to **50 credits** can be applied. **Standard Adjustment 23, Credit Limit**, determines this, however, it can be changed from 04-50; *for details see the Adjustments Section.*

Note: *Once your credits are added, this menu will* ***automatically exit*** *a few seconds after the last button depression or when the* **Green [BACK]** *or* **Black [SELECT] Button** *is pushed. This function is disabled if* ***Standard Adjustment 38, Free Play****, is set to* ***YES****. The Service Credits are limited to the Credit Limit in addition to any paid credits present in the game (e.g. If the Credit Limit is 30, with 8 paid credits present, only 22 Credits can be applied.).*

Pushing either ***RED BUTTON*** *first.*

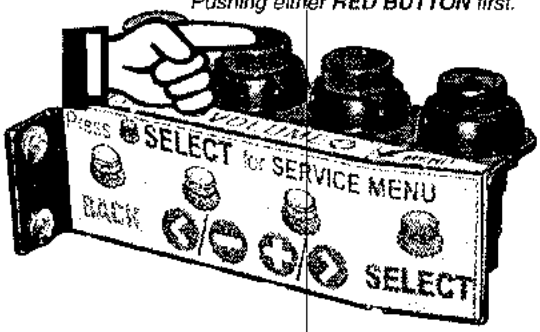

Pushing either ***RED BUTTON*** *first.*

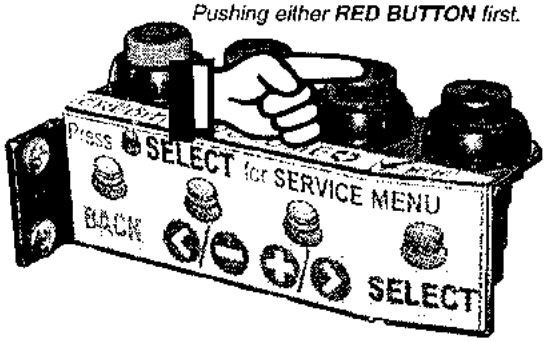

▲ Function 2: VOLUME MENU ▲

Pushing either of the **Red [VOLUME] Buttons** first, enters the ***VOLUME MENU.*** While in this Mode, to **DECREASE** the volume, hold down or depress the **1st Red [< / –] Button** until desired the volume is achieved; to **INCREASE** the volume, hold down or depress the **2nd Red [+ / >] Button** until the desired volume is achieved.

Note: *The volume can be set between* **0-63***; Once your adjustments are made, this menu will* ***automatically exit*** *a few seconds after the last button depression or when the* **Green [BACK]** *or* **Black [SELECT] Button** *is pushed.*

Pushing the ***BLACK BUTTON*** *first.*

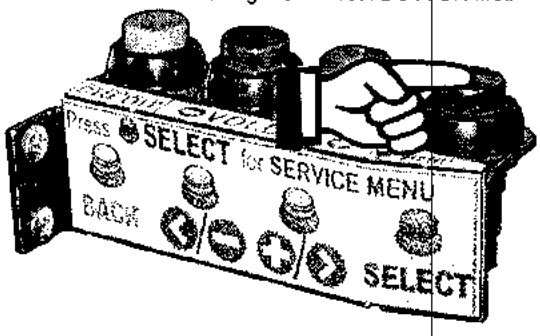

◀ Function 3: SERVICE MENU

Pushing the **Black [SELECT] Button** first, enters the ***SERVICE MENU.*** Once in, navigate through all menus by depressing the **Service Menu Buttons**. Use the **Red [< / –]** *or* **[+ / >] Buttons** to move LEFT / RIGHT, NEXT/PREVIOUS *(audits/adjustments) or* to INCREASE / DESCREASE an adjustment (setting). Use the **Black [SELECT] Button** to select a highlighed *Icon*, move to the next line of text *or* to answer "**OK**" where applicable. Use the **Green [BACK] Button** to exit *or* escape back.

DIAGNOSTIC AIDS

This ***audible / visual alert display*** is shown when the **50V / 20V Power** is disabled *(by opening the Coin Door).* **PULL OUT THE INTERLOCK SWITCH ONLY WHILE IN THE SERVICE MENU FOR COIL, SWITCH OR PLAY TESTING WHEN THE COIN DOOR IS REQUIRED TO STAY OPEN FOR SERVICE BUTTON USE!** Pulling out the Power Interlock Switch or pressing the 'escape' **Green [BACK] Button** will remove the alert display. Initial display presentation is accompanied by 3 audible tones *(the bright display warning will go dim after approximately 30 seconds).*

This ***alert display*** is shown momentarily during **Game Mode** or **Power-Up** to alert the operator of a device malfunction *(device or mechanism doesn't energize or is energized repeatedly).* **OPERATOR ALERT!** works by monitoring any *switch activated device* that has the potential to trap a ball when disabled *(e.g. in the Shooter Lane, Scoop or Eject Holes, etc.).* This alert can also appear if a switch associated with a device *(e.g. Ball Trough, Auto Plunger, etc.)* is stuck closed *(caused by a switch jam or stuck ball)*; the game will activate the device a predetermined number of times and if the problem is still detected, this device *or* switch will be noted in **Switch Alerts** *and/or* **Technician Alerts**.

Upon entering the **SERVICE MENU**, if an asterisk " * " is displayed after the words "SERVICE MENU," the game has detected possible faulty devices, switches and/or missing pinballs. Press the either of the **Red Buttons** *(short-cut to the TECHNICIAN ALERTS MENU) or* continue into the **SERVICE MENU** *(press the **Black Button** again),* select the "DIAG" *Icon* and "TECH" *Icon* for the **Technician Alerts** information.

CPU DIP SWITCH SETTINGS

The 8-Pos. Dip Switch [SW1] is on the CPU/Sound Board (between Conn. J3 & J13, lower left corner)

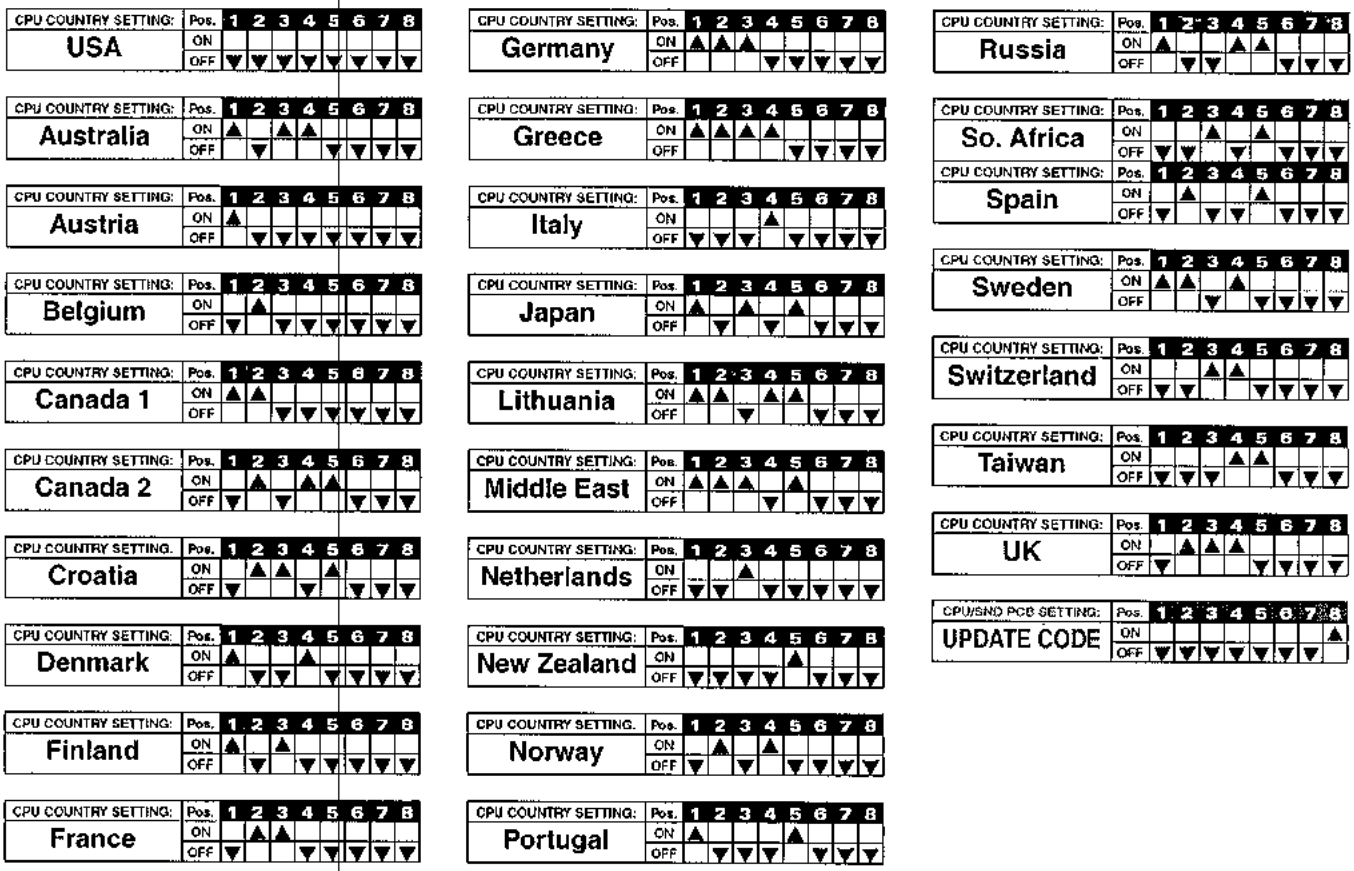

Note: *Slide Dip Switch 8 to Position **ON** (with Dip Switches 1-7 in the **OFF** Position) only to reboot the game with the latest version BOOT EPROM installed at **U9** on the CPU/Sound Board (S.A.M. System only). Currently, this is also the procedure to update your game with the latest software code update file. For the latest version, visit our website. If you have questions about updating your game code, call Technical Support for assistance.*

Service Menu Introduction

Important: *The **Switch Bracket** holds the **Playfield Power Interlock**. It is located just inside the Coin Door frame (see pictorial of the **Coin Door** on the previous page). The Button Switch for the **Playfield Power Interlock Switch** must be pulled out for electro-mechanical device testing or diagnostic purposes (this is required). If this button is pushed in, the **Playfield Power** is disabled while the **Coin Door** is **OPEN.***

To get into the **SERVICE MENU MODE** review **"Function 3: SERVICE MENU"** on the next page. After Power-Up, push down the **Black [SELECT] Button** to begin. Looking at the display you will momentarily see **"SERVICE MENU"** followed by the **MAIN MENU:**

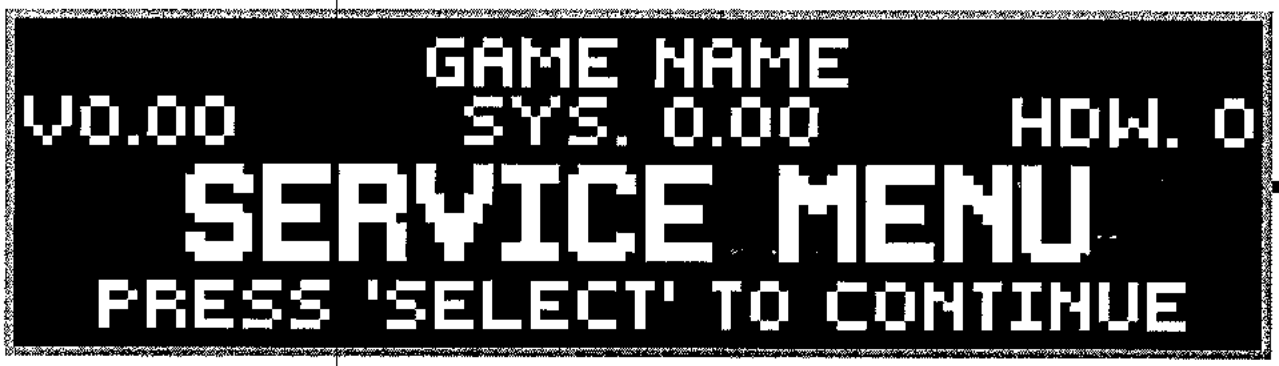

Use the **Red [< / –] / [+ / >] Buttons** to move the selected ***Icon*** left or right, and the **Black [SELECT] Button** fto activate the selected ***Icon.***

The **MAIN MENU** now appears with the "DIAG" *Icon* **(GO TO DIAGNOSTICS MENU)** highlighted:

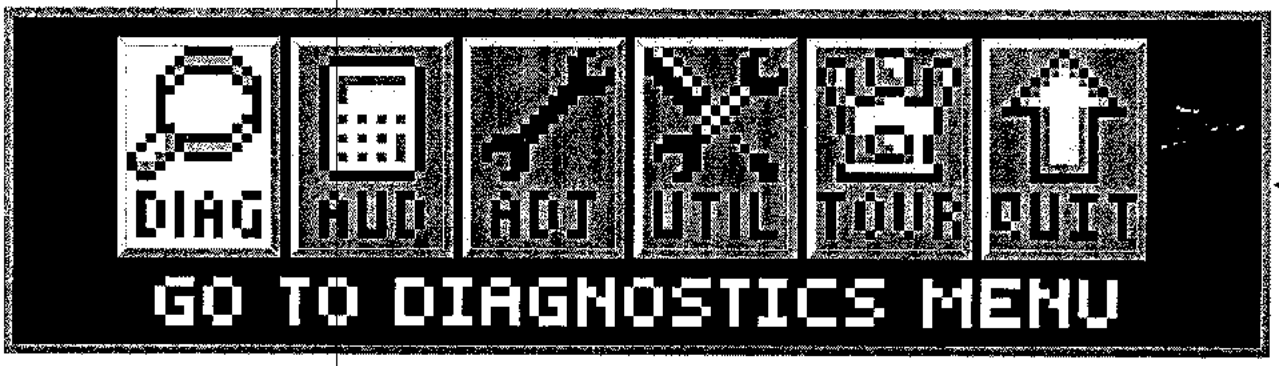

As the operator views the Menu Screen(s), the MORE MORE symbols indicates that there are more *Icons* to select in each direction. The *Icon* selected will blink. Pushing the **Black [SELECT] Button** will select the *Icon* and the Menu Screen will change to the menu selected. Select the **Green [BACK] Button** to move backwards through the menu levels. Press the **Green [BACK] Button** repeatedly or select the **"QUIT"** *Icon* to completely exit the **SERVICE MENU** Mode.

View the **SERVICE MENU Icon Tree** on the next pages for a complete overview of all menus used in this system. The "HELP" *Icon* provides an explanation of **ICON** usage *or* any other information in the Menu where the "HELP" *Icon* was selected *(when available).*

DIAG: GO TO DIAGNOSTICS MENU
AUD: GO TO AUDITS MENU
ADJ: GO TO ADJUSTMENTS MENU
UTIL: GO TO UTILITIES MENU
(INSTALLS, CUSTOM MSG., CUSTOM PRICING, SET TIME, RESET & USB)
TOUR: GO TO TOURNAMENT MENU (START TOURNAMENT, VIEW TOURNAMENT DATA, SIGN MESSAGES)

>> TO UPDATE THE GAME CODE, REVIEW THE STEPS ON THE INSIDE FRONT COVER OF THIS MANUAL.

Use both the manual and the display to help customize, troubleshoot and/or diagnose faults, if any.

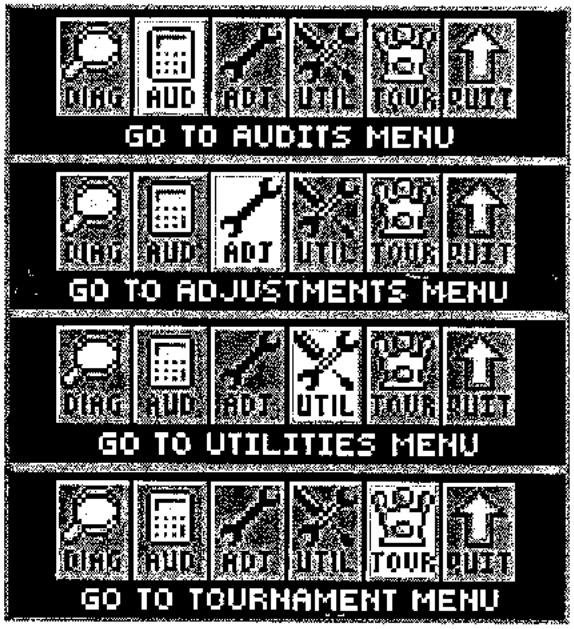

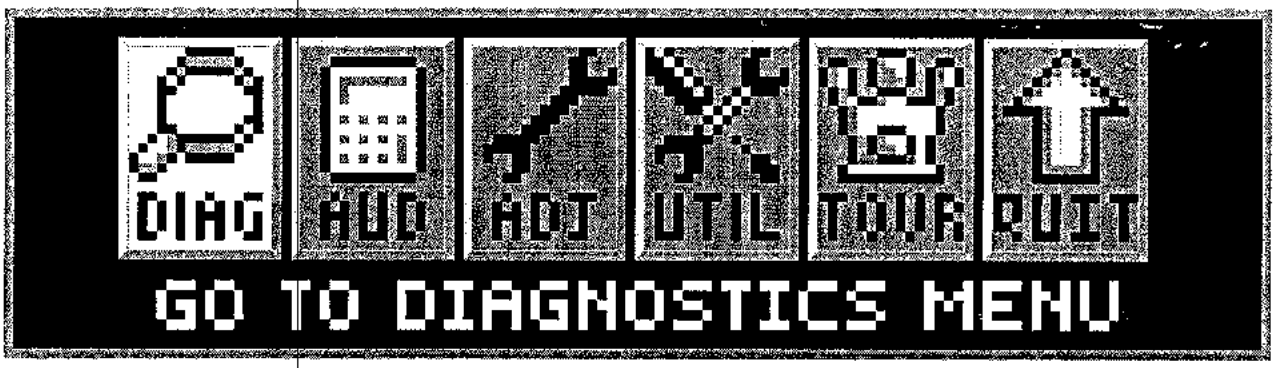

To initiate, from the **MAIN MENU**, select the "DIAG" *Icon*. The **DIAGNOSTICS MENU** provides tests for switches, coils, flash lamps, lamps, sounds and dots in the Dot Matrix Display. Each feature may be tested manually or automatically after entering the **SERVICE MENU** *(see Service Menu Introduction Section)*.
The **[CYCLING COIL TEST] / [FLASH LAMP TEST]** may be used for a quick verification of automatic test functions. The **[SWITCH TEST] / [SINGLE COIL TEST] / [SINGLE LAMP TEST] / [ALL LAMPS TEST] / [ROW LAMPS TEST] / [COLUMN LAMPS TEST] / [FLASH LAMP TEST]** may be used for troubleshooting.

All **DIAGNOSTICS MENU** *Icons* and there usages are explained throughout this chapter in the same order as seen in the Dot Matrix Display. ***NOTE:*** Depending on Game Type, Version, selections made, Dip Switch settings, location and/or areas, some *Icons* may appear non-functional *or* may not appear at all. Some *Icons* change depending on selections *(e.g. Selecting and activating the "STRT" Icon [Start Tournament] will be replaced with the "STOP" Icon [Stop Tournament]).* ***Icons*** *and/or* ***functions, order*** *and* ***operation are subject to change.***

In displays where changes can be made *or* to perform a function, use the **GREEN Button** to go **[BACK]**, exit *or* escape, the **RED Buttons** to [< / –] MOVE BACK / LEFT / DECREASE / [+ / >] MOVE FORWARD / RIGHT / INCREASE a value *or* setting, and the **BLACK Button** to **[SELECT]** next *or* as "OK / ENTER / ENERGIZE."

Important: *Upon* ***Power-Up*** *(Game CPU Reset) or opening the* ***Coin Door*** *watch the* ***Display*** *for any* ***Alerts.****

This ***audible / visual alert display*** is shown when the **50V / 20V Power** is disabled *(by opening the Coin Door).* **PULL OUT THE INTERLOCK SWITCH *ONLY* WHILE IN THE SERVICE MENU FOR COIL OR SWITCH TESTING & BURN-IN WHEN THE COIN DOOR IS REQUIRED TO STAY OPEN FOR SERVICE BUTTON USE!** Pulling out the Power Interlock Switch or pressing the 'escape' **Green [BACK] Button** will remove the alert display. Initial display presentation is accompanied by 3 audible tones *(the bright display warning will go dim after approximately 30 seconds).*

This ***alert display*** is shown momentarily during **Game Mode** or **Power-Up** to alert the operator of a device malfunction *(device or mechanism doesn't energize or is energized repeatedly).* **OPERATOR ALERT!** works by monitoring any *switch activated device* that has the potential to trap a ball when disabled *(e.g. in the Shooter Lane, Scoop or Eject Holes, etc.).* This alert can also appear if a switch associated with a device *(e.g. Ball Trough, Auto Plunger, etc.)* is stuck closed *(caused by a switch jam or stuck ball)*; the game will activate the device a predetermined number of times and if the problem is still detected, this device *or* switch will be noted in **Switch Alerts** *(next page)* and/or **Technician Alerts.**

Upon entering the **SERVICE MENU**, if an asterisk " * " is displayed after the words "SERVICE MENU," the game has detected possible faulty devices, switches and/or missing pinballs. Press the either of the **Red Buttons** *(short-cut to the TECHNICIAN ALERTS MENU) or* continue into the **SERVICE MENU** *(press the* ***Black Button*** *again),* select the "DIAG" *Icon* and "TECH" *Icon* for the **Technician Alerts** information.

CAUTION! Remove all pinballs from the Ball Trough prior to lifting the playfield to it's full upright position for servicing. **PULL OUT** the **Power Interlock Switch** for operation. To eject pinballs, select the "DIAG" *Icon* from the **MAIN MENU** to enter the **DIAGNOSTICS MENU.** Select the "CLR" *Icon* to enter the **BALL TROUGH TEST MENU.** Press the **Black [SELECT] Button.** To return to the **DIAGNOSTICS MENU,** press the **Green [BACK] Button.** *This feature also useful to retrieve a pinball for game testing in* ***Switch*** *or* ***Coil Tests.***

Go To Switch Menu

To initiate, from the **DIAGNOSTICS MENU**, select the "SW" *Icon*. Switches are configured in an 4 X 16 Matrix of Rows [Switch Drives] and Columns [Sw. Returns] with up to **64** possible switches. Dedicated Switches are configured in a 2 X 16 Matrix of Rows [Dedicated Sw. Drives / Ground] and Column [Ded. Switch Returns] with up to **32** possible dedicated switches *(includes the 8 dip switch positions)*. The **SWITCH TEST MENU** consists of three (3) parts: **Switch & Active Switch Tests** and **Switch Alerts** to test ***all*** switches.

Reminder: *The **Flipper & Start Buttons** (part of Switch Tests) are temporarily disabled as **Service Menu Navigation Buttons** during these test(s) so they can be tested and shown on-screen. Pressinng the **Green [BACK] Button** (Dedicated Switch **D-21**), Light Green-Black / Black (GND), will exit **Switch Test** or **Active Switch Test**.*

Switch Test

To initiate, from the **SWITCH MENU**, select the "TEST" *Icon*. Ensure the **Power Interlock Switch** is pulled out if testing with the Coin Door open and the activation of coils is required. Upon entering **Switch Test**, you will notice that some switches are already indicated as closed. In the examples, the 4-Ball Trough Switches **#18, #19, #20** & **#21** are shown closed *(pinballs at rest in the ball trough)*, along with the Flipper E.O.S. Dedicated Switches **D-10** & **D-12** (End-of-Stroke Switches are 'normally closed'). If the game has more flippers with E.O.S. Dedicated Switches, CPU Dip Switch Setting *other than* 1-8 OFF or switches stuck closed, more dots will be indicated *(enter **Active Switch Test** to reveal the names)*.

Upon entering **Switch Test**, you will notice that some switches are already indicated as 'closed'. ▼

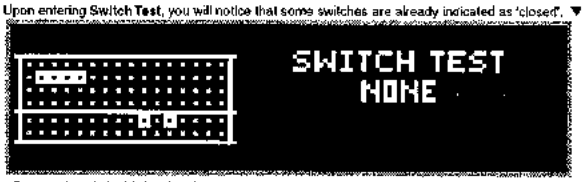

D-24 position is highlighted and accompanied by a short audible tone when pressed. ▼

After pressing the switch *(to make it close)*, the display will indicate the last switch number. ▼

In **Switch Test**, close each switch and observe the display *(switch closure is accompanied by a short audible tone)*. In the example, the **Black [SELECT] Button** Dedicated Switch **D-24** is pressed. The Dot Matrix Display will light up *(highlight)* the corresponding *dot* in the on-screen matrix, display the *switch name, switch number* and the *Switch Drive / Return wire colors*. When not closing a switch, the display indicates **NONE** and the last switch number closure. For the Switch Matrix Grid and Dedicated Switch Grid, see **Find-It-In-Front: Dr. Pinball, DR. 4** *or* escape out of this test and enter **Active Switch Test** *(described below)* to view the names of the switches closed. ***Note:*** *Pressinng the **Green [BACK] Button** (Ded. Switch **D-21**), Lt. Green-Black / Black (GND), will exit the **Switch Test**.*

CAUTION! COIL MECHANISMS WHEN ACTIVATED HAVE FAST MOVING PARTS! While performing **Switch Test** with the Coin Door closed *or* open *(with the Power Interlock Switch is pulled out)*, **DO NOT USE YOUR FINGER** to test switches which are associated with a coil mechanism such as a Vertical Up-Kicker *(hole with a switch)*, Slingshots, Bumpers, etc..

Typical Switch Wiring & Schematic

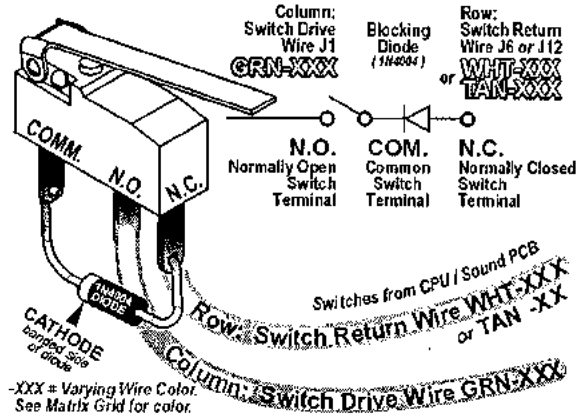

Active Switch Test

To initiate, from the **SWITCH MENU**, select the "ACT" *Icon*. In **Active Switch Test**, if any switches are stuck closed *(or normally closed from the presence of pinball(s) as in the Ball Trough)*, the display will flash the corresponding dot(s) in the on-screen matrix, display the *name* and the *Switch Drive / Return wire colors*. If more than one switch is closed, the switch information will change with each switch. This cycle continues until all switches are cleared *or* until **Active Switch Test** is exited. In the example, the **Black [SELECT] Button** Dedicated Switch **D-24** is pressed and held down. The display will cycle and flash each dot, naming each switch which is closed. To determine the *switch number,* compare the highlighted dot to the same position in the Switch Matrix Grid at the beginning of this manual.

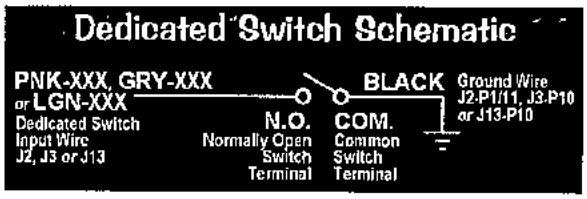

...D-24 is held down. The display will cycle and flash each dot, naming each switch ... closed. ▼

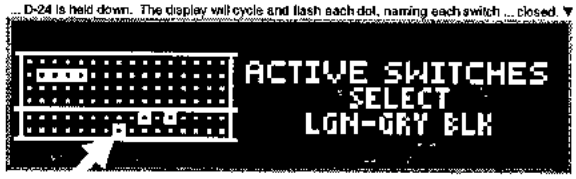

Switch Alerts

To initiate, from the **SWITCH MENU**, select the "ALRT" *Icon*. In **Switch Alerts Menu**, possible inoperable switches are marked with an "X" (OUT OF SERVICE). Mark switches **IN** *or* **OUT OF SERVICE** by pressing the **Black Button** while the intended switch is highlighted and change with either of the **Red Buttons**. Switches which are determined as "OUT OF SERVICE" by the game *or* manually, will be automatically marked as "IN SERVICE" as soon as the game determines a valid switch closure *(after adjusting, fixing or replacing the switch, then testing/actuating the switch)*. ***Note:*** *A **Factory Reset** will also put the switch back "IN SERVICE" in which the game will need to redetermine if the switch should be marked **OUT OF SERVICE**.*

Go To Coil Menu

To initiate, from the **DIAGNOSTICS MENU**, select the "COIL" *Icon*. Coils **#01 – #16** are typically High Current Coils *(although Low Current Coils may be used in these positions & will be noted)*. Coils **#17 – #32** are typically Low Current Coils. Flash Lamps are typically used in positions **#25 – #32** *(although Flash Lamps may be used in any position and will be noted)*. Auxiliary Coils may be used in positions **#33 – #35**.

Remember, use the **GREEN Button** to go **[BACK]**, exit *or* escape, the **RED Buttons** to **[< / –]** GO BACK **[+ / >]** GO FORWARD, and the **BLACK Button** to **[SELECT]** ENERGIZE the coil *(solenoid)* or flash lamp.

Single Coil Test

To initiate, from the **COIL MENU**, select the "TEST" *Icon*. Ensure the **Power Interlock Switch** is pulled out if testing with the Coin Door open. Upon entering **Single Coil Test**, you will notice the #1 coil is shown. The Dot Matrix Display will indicate the *coil or flash lamp name, coil (solenoid) or flash lamp number* and the *Coil or Flash Lamp Power Line / Drive Transistor Control Line wire colors*. To determine the "Pin-Outs" from the I/O Power Driver Board, the Coil Voltage Gauge-Turns *(e.g. 23-800)* or lamp type *(e.g. #89 or #906 Bulb)*, view the Coils Detailed Chart Table at the beginning of this manual *or* for more on troubleshooting and diagnosing, see the Yellow Pages *(Schematics & Wiring)*.

Typical Coil Wiring & Schematic

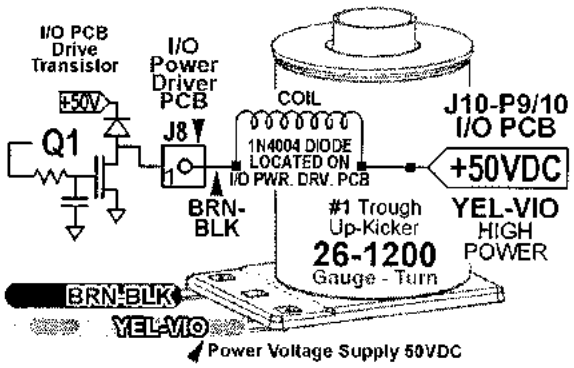

Cycling Coil Test

To initiate, from the **COIL MENU**, select the "CYC" *Icon*. Ensure the **Power Interlock Switch** is pulled out if testing with the Coin Door open. The test pulses each regular coil or flash lamp sequentially *(cycling)* on the Playfield and in the Backbox *(if coils or flash lamps are used)*. The Dot Matrix Display indicates the same information you will find in **Single Coil Test**.

Go To Flash Lamps Menu

To initiate, from the **DIAGNOSTICS MENU**, select the "FLASH" *Icon*. The two tests allows the technician to easily spot any burned-out flash lamps and replace them. Unlike **Single Coil Test**, which tests ***all*** coil *(solenoids)*, including flash lamps, **Single** and **Cycling Flash Lamp Tests**, test only the flash lamps used in the game. Flash Lamps are typically used in positions **#25 – #32** *(although Flash Lamps may be used in any position and will be noted)*.

Remember, use the **GREEN Button** to go **[BACK]**, exit *or* escape, the **RED Buttons** to **[< / –]** GO BACK / **[+ / >]** GO FORWARD, and the **BLACK Button** to **[SELECT]** ENERGIZE the flash lamp.

Single Flash Lamp Test

To initiate, from the **FLASH LAMPS MENU**, select the "TEST" *Icon*. Ensure the **Power Interlock Switch** is pulled out if testing with the Coin Door open. Upon entering **Single Flash Lamp Test**, you will notice the first Flash Lamp is shown. The Dot Matrix Display will indicate the *flash lamp name, flash lamp number* and the *Flash Lamp Power Line / Drive Transistor Control Line wire colors*. To determine the "Pin-Outs" from the I/O Power Driver Board or lamp type *(e.g. #89 or #906 Bulb)*, view the Coils Detailed Chart Table at the beginning of this manual *or* for more on troubleshooting and diagnosing, see the Yellow Pages *(Schematics & Wiring)*.

Bulb Types used for Flash Lamps

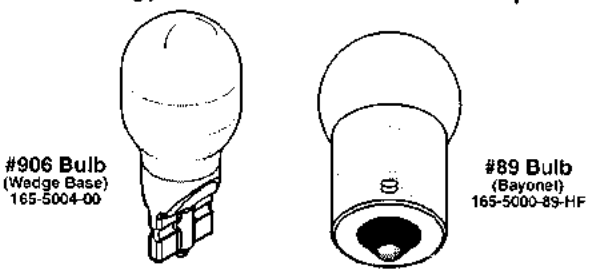

Cycling Flash Lamp Test

To initiate, from the **FLASH LAMPS MENU**, select the "CYC" *Icon*. Ensure the **Power Interlock Switch** is pulled out if testing with the Coin Door open. The test pulses each flash lamp sequentially *(cycling)* on the Playfield and in the Backbox *(if flash lamps are used)*. The Dot Matrix Display indicates the same information you will find in **Single Flash Lamp Test**.

Technician Alerts continued from previous page.

During game play, a pinball can get trapped *or* stuck. If after approximately 15 seconds of inactivity or "no scoring," **Ball Search** is started. ***Note:*** *If the pinball is in the Plunger Lane or "held" on the flipper, no* ***Ball Search*** *will be performed.* The game will perform one **Ball Search** in an attempt to "find" or free-up the pinball.

If the game does not see a switch closure *(indicating the pinball has not been found)*, the Dot Matrix Display may indicate **[LOCATING PINBALLS PLEASE WAIT ...]**, during which **Ball Search** will continue until the timer runs out *(this feature will not happen if the game is in Competition Mode; Ball Search will continue until the pinball is found, unstuck and/or replaced manually).* The display will momentarily acknowledge the missing pinball(s). The game will provide another pinball into play and will compensate for the lost pinball. Game play will appear normal.

Note: *This detection and compensation will happen with every pinball, if each suffers the same fate of a ball trap. If* ***all*** *balls get trapped, the game cannot be played or started until the situation is rectified.*

Important: *Determine where the pinball is!* ***Do not add pinball(s)*** *until it is determined the pinball(s) are indeed missing and not just stuck. The most common places for a pinball to be stuck is in device holes (ejects and VUKs) or* ball troughs. Determine that all devices are functionally properly. Check around plastic pieces and ramps to see if the pinball got jammed *or* stuck.

When the found pinball *or* a replacement pinball is added to the Ball Trough, the **Technican Alert** will immediately clear and will then indicate any remaining alerts *(if present) or* **NO TECHNICIAN ALERTS**.

Enter the **BALL TROUGH TEST** *(review the previous page)* to cycle the pinballs and to check proper switch and coil operation. *If a pinball was added, and the originally stuck pinball has freed itself at a later time, the game will not operate correctly.*

NOTE ON DEVICE MALFUNCTION : While in **TECHNICIAN ALERTS MENU**, if the following is displayed, the game has detected a "device malfunction." Check the device indicated *(coil and/or switch).*

Knocker Test

To initiate, from the **DIAGNOSTICS MENU**, select the "KNO- CKER" *Icon.* The digitally mastered "Knocker" is sounded. The *knocker sound* is used to alert the player if he/she has received a special, replay or a credit from the Match Award feature. Press the **Black [SELECT] Button** to activate the knocker. To return to the **DIAGNOSTICS MENU**, press the **Green [BACK] Button.**

FACTOID: *The knocker got it's name from the 'original knocker' (20th century pinball games), which used a coil and when energized (fired), the plunger would strike a wood panel inside the cabinet.*

Sound / Speaker Test

To initiate, from the **DIAGNOSTICS MENU**, select the "SPKR" *Icon.* This system produces true digital stereo sound from Backbox & Cabinet Speakers or *"Mono"* on the Cabinet Speaker *(when used by itself).* This Menu is provided to allow the technician a simple method of testing the speakers if rewired or replaced.

Upon entering **Sound / Speaker Test**, you will notice the Dot Matrix Display indicating the first option of *available* music *and/or* sound(s) in this test. Press the **Red [+ / >] Button** to cycle through the *available* music *and/or* sounds, and press the **Black [SELECT] Button** to play the option shown in the Dot Matrix Display. Press the **Green [BACK] Button** to exit.

Speaker Phase Testing

Connections to each of speakers are polarized and each must be connected appropriately for the best quality sound. If one speaker has the positive and negative connections reversed with respect to the other one, bass frequencies will not be produced properly and the overall sound quality will be poor. To test for proper speaker phasing, use the **Sound / Speaker Test** to cycle through the available music and sound.

Speaker Phase Testing cont. next page.

Speaker Phase Testing continued from previous page.

If the sound is not balanced or doesn't sound correct, check the speaker wiring.

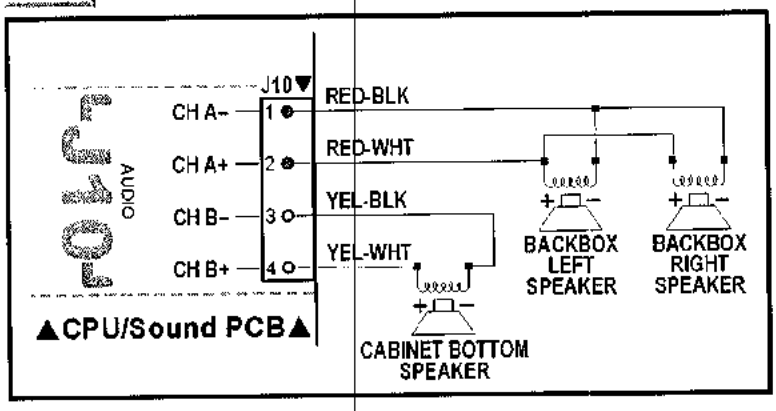

1. Check each speaker for polarity markings. If the speakers have polarity markings, verify that the Backbox Speaker's **RED-BLK** Wires and the Cabinet Speaker **YEL-BLK** Wire(s) are connected to the negative (–) terminal.

2. Disconnect the speaker output **Connector J10 (AUDIO)** from the CPU / Sound PCB *(in the Backbox)* and connect a 1.5-volt battery across each speaker pair one at a time while observing the speakers.

3. Make sure the positive (**+**) battery terminal is connected to the positive lead [J10, Pin-2, **CH A+**] (**RED-WHT**) *or* [J10, Pin-4, **CH B+**] (**YEL-WHT**) each time. As the connection is made, check speaker cone movement; proper connections are indicated by outward movement.

Begin Burn-In

To initiate, from the **DIAGNOSTICS MENU**, select the "BURN" *Icon*. After selecting this *Icon*, press the **Black [SELECT] Button** to begin (initiate) the ***Burn-In Test***. Ensure the **Power Interlock Switch** is pulled out if testing with the Coin Door open *(required for coil function)*. Upon entering **Burn-In Test**, the game will exercise all CPU I/O Functions: **Dot Matrix Display Test**, **Coil Cycling Testing**, **All Lamps Test** and **Sound / Speaker Test**. Press the **Green [BACK] Button**, to pause and to view the cumulative Burn-In minutes. Press the **Green [BACK] Button** again to return to the **DIAGNOSTICS MENU**.

Note: *To reset Burn-In minutes back to **0:00**, see Section **3**, Chapter **5**, **GO TO RESET MENU** (via the UTILITIES MENU), **Reset Factory Settings**. ⚠ **CAUTION:** Performing a **FACTORY RESET** will reset all other information as well (read the Utilities Section (**GO TO RESET MENU**), for more information).*

Dot Matrix Test

To initiate, from the **DIAGNOSTICS MENU**, select the "DOT TEST" *Icon*. After selecting this *Icon* the **Dot Matrix Test** immediately begins. The Dot Matrix Display will immediately and continuously illuminate and cycle each of the ***5 Tests for 1 pass each***. To return to the **DIAGNOSTICS MENU**, press the **Green [BACK] Button**.

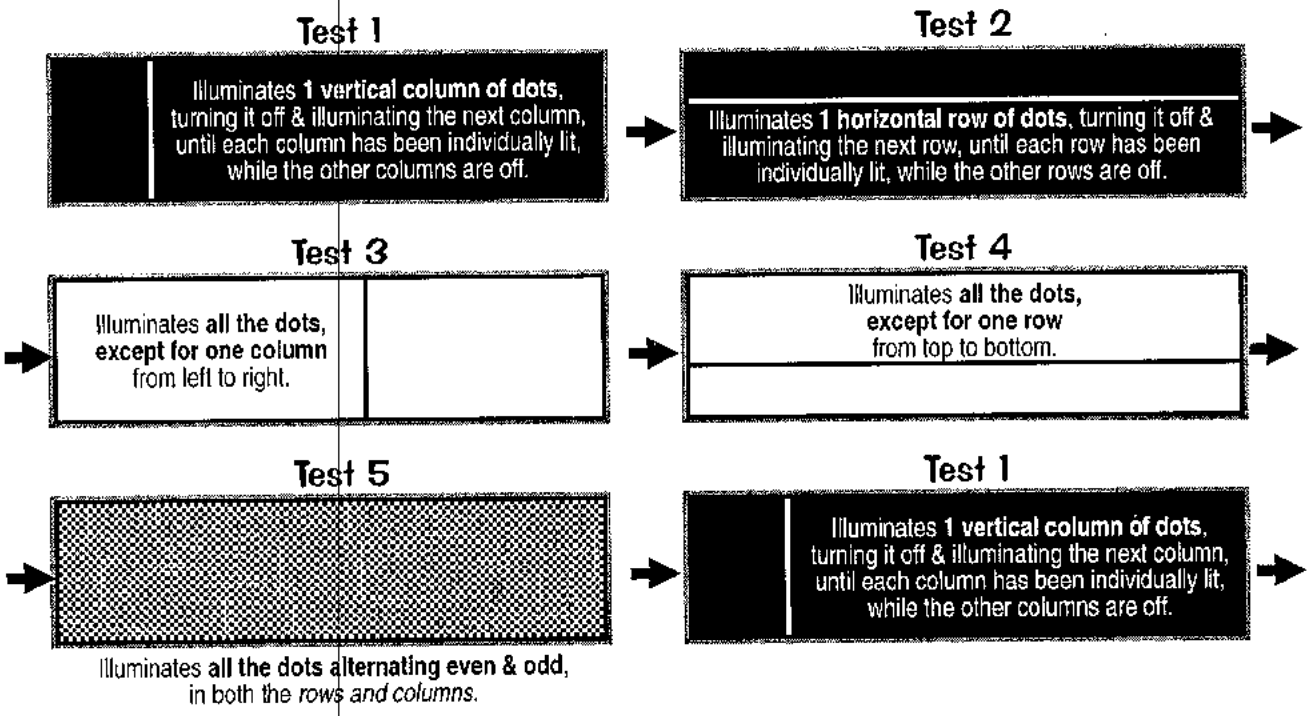

Ticket Dispenser Test

To initiate, from the **DIAGNOSTICS MENU**, select the "TIX" *Icon.* This Menu *(Icon) will only appear* if **Standard Adjustment 56, Ticket Dispenser,** is set to **YES** (Default = **NO***). ***Note:** Some games shipped from the factory with a unique Dip Switch Setting will default to **YES**). To view and/or change your setting, see Adjustments Section (**GO TO ADJUSTMENTS MENU**). Please remember, if you install an optional Ticket Dispenser, and your default setting is "NO," you will have to reset it back to "YES" if a **Factory Reset** is performed.*

After selecting this *Icon*, the ***Ticket Dispenser Test*** will start. With the Ticket Dispenser properly installed, manually feed your tickets into the dispenser. The dispenser will activate and pull in the first ticket. Press the **Black [SELECT] Button** (which energizes Coil #35, Aux 3: Switched Ground) to advance a ticket. Feeding your Tickets into the dispenser works because Coil #33, Aux 1: Ticket Advance (Enable) is always 'energized'. With a Ticket Meter installed, as one Ticket Passes through the Ticket Dispenser, one 'click' is fired to the Meter (Coil #34, Aux 2: Ticket Meter) for each ticket passing through. Dedicated Switch **D-19, Ticket Notch**, will also be indicated on-screen *(in combination with a audible sound)* as "closing" as the notch between the tickets passes through. In this test you can clear ticket jams and check and/or clear tickets in Escrow, if necessary. To return to the **DIAGNOSTICS MENU**, press the **Green [BACK] Button**.

SWITCH MATRIX GRID [#1 - #64] {Switch Locations : next page}

CPU/ Sound Board	01 IC-U22A RETURN▲ WHT-BRN J6-P9	02 IC-U22B RETURN▲ WHT-RED J6-P8	03 IC-U22C RETURN▲ WHT-ORG J6-P7	04 IC-U22D RETURN▲ WHT-YEL J6-P6	05 IC-U16A RETURN▲ WHT-GRN J6-P5	06 IC-U16B RETURN▲ WHT-BLU J6-P3	07 IC-U16C RETURN▲ WHT-VIO J6-P2	08 IC-U16D RETURN▲ WHT-GRY J6-P1	09 IC-U36A RETURN▲ TAN-BLK J12-P9	10 IC-U36B RETURN▲ TAN-RED J12-P8	11 IC-U36C RETURN▲ TAN-ORG J12-P7	12 IC-U36D RETURN▲ TAN-YEL J12-P6	13 IC-U40A RETURN▲ TAN-GRN J12-P4	14 IC-U40B RETURN▲ TAN-BLU J12-P3	15 IC-U40C RETURN▲ TAN-VIO J12-P2	16 IC-U40D RETURN▲ TAN-WHT J12-P1
01 Q1 DRIVE ▶ GRN-BRN J1-P1	S.W. #1 L 3 BANK #1 (BOT) 515-7640-09 BELOW PF	S.W. #2 L 3 BANK # 2 (MID) 515-7640-09 BELOW PF	S.W. #3 L 3 BANK # 3 (TOP) 515-7640-09 BELOW PF	S.W. #4	S.W. #5	S.W. #6 TOP LANE RONNIE 500-6227-04 BELOW PF	S.W. #7 TOP LANE MICK 500-6227-04 BELOW PF	S.W. #8 TOP LANE KEITH 500-6227-04 BELOW PF	S.W. #9 TOP LANE CHARLIE 500-6227-04 BELOW PF	S.W. #10 R. 3 BANK # 1 (BOT) 515-7640-07 BELOW PF	S.W. #11 R. 3 BANK # 2 (MID) 515-7640-07 BELOW PF	S.W. #12 R. 3 BANK # 3 (TOP) 515-7640-07 BELOW PF	S.W. #13	S.W. #14	S.W. #15 TOURN START 180-5174-00 CABINET	S.W. #16 START 180-5174-00 CABINET
02 Q2 DRIVE ▶ GRN-RED J1-P3	S.W. #17 TROUGH #5 (L) 180-5119-02 BELOW PF	S.W. #18 TROUGH #4 180-5119-02 BELOW PF	S.W. #19 TROUGH #3 180-5119-02 BELOW PF	S.W. #20 TROUGH #2 180-5119-02 BELOW PF	S.W. #21 TROUGH #1 515-0173-00 515-0174-00	S.W. #22 TROUGH JAM 515-0173-00 515-0174-00	S.W. #23 SHOOTER LANE 180-5167-00 BELOW PF	S.W. #24 LEFT OUTLANE 500-6227-04 BELOW PF	S.W. #25 LEFT RETURN LANE 500-6227-04 BELOW PF	S.W. #26 LEFT SLINGSHOT 180-5054-00 BELOW PF	S.W. #27 RIGHT SLINGSHOT 180-5054-00 BELOW PF	S.W. #28 RIGHT RETURN LANE 500-6227-04 BELOW PF	S.W. #29 RIGHT OUTLANE 500-6227-00 BELOW PF	S.W. #30 LEFT POP BUMPER 180-5015-04 BELOW PF	S.W. #31 RIGHT POP BUMPER 180-5015-04 BELOW PF	S.W. #32 BOTTOM POP BUMPER 180-5015-04 BELOW PF
03 Q3 DRIVE ▶ GRN-ORG J1-P4	S.W. #33 MICK POS. #1 (HOME) 520-5292-00 BELOW PF	S.W. #34 MICK POS. # 2 520-5292-00 BELOW PF	S.W. #35 MICK POS. # 3 520-5292-00 BELOW PF	S.W. #36 MICK POS. # 4 520-5292-00 BELOW PF	S.W. #37 MICK POS. # 5 520-5292-00 BELOW PF	S.W. #38 MICK POS # 7 (AWAY) 520-5292-00 BELOW PF	S.W. #39 MICK POS. # 6 520-5292-00 BELOW PF	S.W. #40	S.W. #41 L ORBIT SPINNER 180-5010-04 ABOVE PF	S.W. #42 L RAMP EXIT 180-5067-00 ABOVE PF	S.W. #43 POP BUMPER LANE 500-6775-01 ABOVE PF	S.W. #44 LEFT ORBIT 500-6227-04 BELOW PF	S.W. #45 R. RAMP EXIT 180-5067-00 ABOVE PF	S.W. #46 CENTER LOCK 2 (TOP) 500-6775-01 ABOVE PF	S.W. #47	S.W. #48 RIGHT ORBIT 500-6227-04 BELOW PF
04 Q4 DRIVE ▶ GRN-YEL J1-P5	S.W. #49	S.W. #50 SHOOTER LANE (TOP) 500-6227-04 BELOW PF	S.W. #51 STAR TARGET (LEFT) 515-6967-07 BELOW PF	S.W. #52	S.W. #53 CENTER LOCK 1 (BOT) 500-6227-04 BELOW PF	S.W. #54 ROCK STAR (LEFT) 515-7568-02 BELOW PF	S.W. #55 ROCK STAR (RIGHT) 515-7568-02 BELOW PF	S.W. #56 STAR TARGET (RIGHT) 515-6967-07 BELOW PF	S.W. #57 STAR TARGET (CENTER) 515-6967-07 BELOW PF	S.W. #58	S.W. #59	S.W. #60	S.W. #61	S.W. #62	S.W. #63	S.W. #64

« FOR MORE ABOUT DIODE ON TERMINAL STRIPS «DOTS », SEE SECTION 5, CHAPTER 2, PAGES 104-105 »

Wire Color Abbreviations used: BLK Black, BLU Blue, BRN Brown, GRY Gray, GRN Green, LGN Light Green, ORG Orange, PNK Pink, RED Red, TAN Tan, VIO Violet, WHT White, YEL Yellow

Dedicated Switches [#D-1 - #D-32] {Dedicated Switch Locations : next page}

CPU/SND Board	PNK-BRN J2-P2	PNK-RED J2-P3	PNK-ORG J2-P4	PNK-YEL J2-P5	PNK-GRN J2-P7	PNK-BLU J2-P8	PNK-VIO J2-P9	PNK-GRY J2-P10	GRY-BRN J3-P1	GRY-RED J3-P2	GRY-ORG J3-P4	GRY-YEL J3-P5	GRY-GRN J3-P6	GRY-BLU J3-P7	GRY-VIO J3-P8	GRY-BLK J3-P9
	S.W. D-1 LEFT COIN SLOT 180-5204-00 COIN DOOR	S.W. D-2 CENTER COIN SLOT 180-5204-00 COIN DOOR	S.W. D-3 RIGHT COIN SLOT 180-5204-00 COIN DOOR	S.W. D-4 4TH COIN SLOT 180-5204-00 COIN DOOR	S.W. D-5 4TH COIN SLOT IF USED	S.W. D-6	S.W. D-7 WHITE BALL DETECTOR 535-0405-00 535-0405-01	S.W. D-8 MICK TARGET 180-5207-00 BELOW PF	S.W. D-9 LEFT FLIPPER BUTTON 500-6869-01 CABINET	S.W. D-10 LEFT FLIPPER E.O.S. 180-5149-00 FLIP ASM.	S.W. D-11 RIGHT FLIPPER BUTTON 500-6869-01 CABINET	S.W. D-12 RIGHT FLIPPER E.O.S. 180-5149-00 FLIP ASM.	S.W. D-13 LEFT UP / DOWN POST 500-6869-01 CABINET	S.W. D-14	S.W. D-15 RIGHT UP / DOWN POST 500-6869-01 CABINET	S.W. D-16

CPU/SND Board	LGN-BRN J13-P1	LGN-RED J13-P3	LGN-ORG J13-P4	LGN-YEL J13-P5	LGN-BLK J13-P6	LGN-BLU J13-P7	LGN-VIO J13-P8	LGN-GRY J13-P9
	S.W. D-17 TILT PENDULUM	S.W. D-18 SLAM TILT OPTIONAL 180-6032-00	S.W. D-19 TICKET NOTCH # USED	S.W. D-20	S.W. D-21 BACK (GREEN) 180-5192-04 COIN DOOR	S.W. D-22 MINUS (RED) 180-5192-02 COIN DOOR	S.W. D-23 PLUS (RED) 180-5192-02 COIN DOOR	S.W. D-24 SELECT (BLACK) 180-5192-00 COIN DOOR

CPU/SOUND BD. SW1 DIP SWITCH *(located between Connectors J3/J13)*

S.W. D-25	S.W. D-26	S.W. D-27	S.W. D-28	S.W. D-29	S.W. D-30	S.W. D-31	S.W. D-32
S.W. POS. #1 ON	S.W. POS. #2 ON	S.W. POS. #3 ON	S.W. POS. #4 ON	S.W. POS. #5 ON	S.W. POS. #6 ON	S.W. POS. #7 ON	S.W. POS. #8 ON

(Note) Switches 17, 50, D-7, D-13, & D-15 are used on the Premium model

SWITCH MENU: SWITCH, ACTIVE, SINGLE & SERVICE

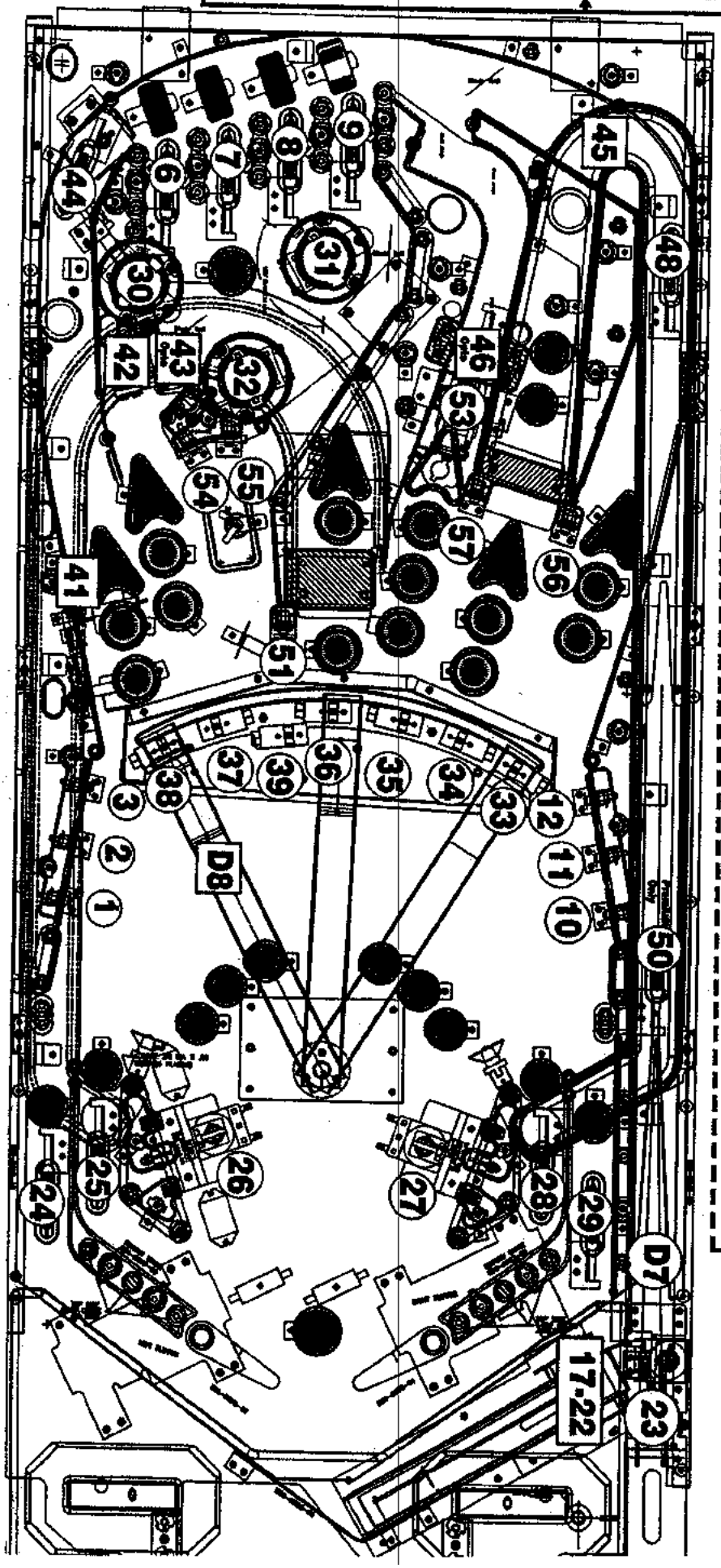

SWITCH LOCATIONS
{Switch Matrix Grid : previous page}

Typical Switch Wiring & Schematic

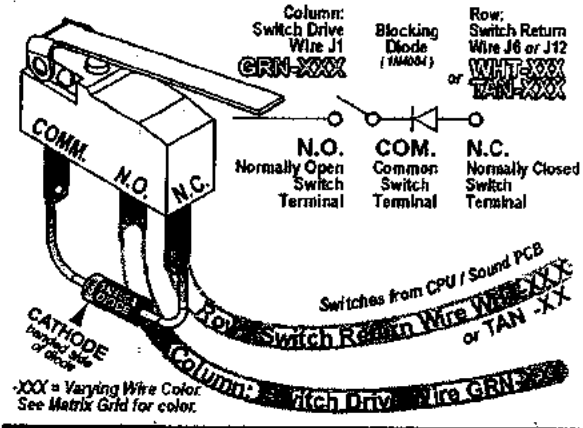

Dedicated Switch Schematic

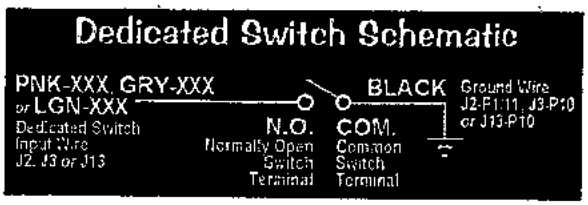

Typical Switch Wiring & Schematic
... with Switch Diode on a Terminal Strip (DOTS)

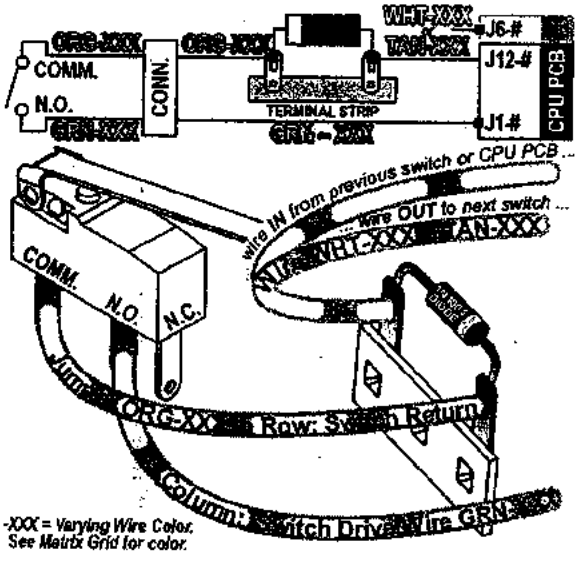

LAMP MATRIX GRID [#1 - #80] {Lamp Locations : next page}

I/O Power Driver Board	01 IC-U17	02 IC-U16	03 IC-U15	04 IC-U14	05 IC-U13	06 IC-U12	07 IC-U11	08 IC-U10
	16VDC YEL-BRN J13-P9	16VDC YEL-RED J13-P8	16VDC YEL-ORG J13-P7	16VDC YEL-BLK J13-P6	16VDC YEL-GRN J13-P5	16VDC YEL-BLU J13-P4	16VDC YEL-VIO J13-P3	16VDC YEL-GRY J13-P1
01 Q33 GROUND RED-BRN J12-P1	# 555 CLEAR L.P. #1 START BUTTON 165-5002-00	# 555 CLEAR L.P. #2 TOURN START BUTTON 165-5002-00	# 555 CLEAR L.P. #3 SHOOT AGAIN 165-5002-00	# 555 CLEAR L.P. #4 LEFT OUTLANE 165-5002-00	# 555 CLEAR L.P. #5 LEFT RETURN LANE 165-5002-00	# 555 CLEAR L.P. #6 RIGHT RETURN LANE 165-5002-00	# 555 CLEAR L.P. #7 RIGHT OUTLANE 165-5002-00	# 555 CLEAR L.P. #8 (V)I(P) 165-5002-00
02 Q34 GROUND RED-BLK J12-P2	# 555 CLEAR L.P. #9 V(I)P 165-5002-00	# 555 CLEAR L.P. #10 VI(P) 165-5002-00	# 555 CLEAR L.P. #11 GUITAR # 3 (TOP) 165-5002-00	# 555 CLEAR L.P. #12 GUITAR # 2 (MID) 165-5002-00	# 555 CLEAR L.P. #13 GUITAR # 1 (BOT) 165-5002-00	# 555 CLEAR L.P. #14 LEFT ORBIT (X) 165-5002-00	# 555 CLEAR L.P. #15 L. LOOP RECORD 165-5002-00	# 555 CLEAR L.P. #16 L. LOOP ARROW 165-5002-00
03 Q35 GROUND RED-ORG J12-P3	# 555 CLEAR L.P. #17 POP LANE (X) 165-5002-00	# 555 CLEAR L.P. #18 POP LANE RECORD 165-5002-00	# 555 CLEAR L.P. #19 POP LANE ARROW 165-5002-00	# 44 CLEAR L.P. #20 START # 1 (LEFT) 165-5000-44-HF	# 555 CLEAR L.P. #21 LEFT RAMP (X) 165-5002-00	# 555 CLEAR L.P. #22 LEFT RAMP RECORD 165-5002-00	# 555 CLEAR L.P. #23 LEFT RAMP ARROW 165-5002-00	# 555 CLEAR L.P. #24 PLAY RECORDS 165-5002-00
04 Q36 GROUND RED-YEL J12-P4	# 555 CLEAR L.P. #25 CENTER LANE (X) 165-5002-00	# 555 CLEAR L.P. #26 CENTER LANE RECORD 165-5002-00	# 555 CLEAR L.P. #27 CENTER LANE ARROW 165-5002-00	# 555 CLEAR L.P. #28 RIGHT RAMP (X) 165-5002-00	# 555 CLEAR L.P. #29 RIGHT RAMP RECORD 165-5002-00	# 555 CLEAR L.P. #30 RIGHT RAMP ARROW 165-5002-00	# 555 CLEAR L.P. #31 WORLD TOUR 165-5002-00	# 555 CLEAR L.P. #32 FAST SCORING 165-5002-00
05 Q37 GROUND RED-GRN J12-P5	# 555 CLEAR L.P. #33 ROCK STAR 165-5002-00	# 555 CLEAR L.P. #34 RECORDS 165-5002-00	# 555 CLEAR L.P. #35 LICKS 165-5002-00	# 555 CLEAR L.P. #36 COMBOS 165-5002-00	# 44 CLEAR L.P. #37 STAR # 2 (CENTER) 165-5000-44-HF	# 44 CLEAR L.P. #38 STAR # 3 (RIGHT) 165-5000-44-HF	# 555 CLEAR L.P. #39 EXTRA BALL 165-5002-00	# 555 CLEAR L.P. #40 SPECIAL 165-5002-00
06 Q38 GROUND RED-BLU J12-P6	# 555 CLEAR L.P. #41 RIGHT ORBIT (X) 165-5002-00	# 555 CLEAR L.P. #42 RIGHT ORBIT RECORD 165-5002-00	# 555 CLEAR L.P. #43 RIGHT LOOP ARROW 165-5002-00	# 555 CLEAR L.P. #44 TOP LANE (RONNIE) 165-5002-00	# 555 CLEAR L.P. #45 TOP LANE (MICK) 165-5002-00	# 555 CLEAR L.P. #46 TOP LANE (KEITH) 165-5002-00	# 555 CLEAR L.P. #47 TOP LANE (CHARLIE) 165-5002-00	# 555 CLEAR L.P. #48 MICK POS. # 7 (AWAY) 165-5002-00
07 Q39 GROUND RED-VIO J12-P8	# 555 CLEAR L.P. #49 MICK POS. # 6 165-5002-00	# 555 CLEAR L.P. #50 MICK POS. # 4 165-5002-00	# 555 CLEAR L.P. #51 MICK POS. # 3 165-5002-00	# 555 CLEAR L.P. #52 MICK POS. # 2 165-5002-00	# 555 CLEAR L.P. #53 MICK POS. # 1 (RIGHT) 165-5002-00	L.P. #54	L.P. #55	L.P. #56
08 Q40 GROUND RED-GRY J12-P9	L.P. #57	# 555 CLEAR L.P. #58 ALBUM MULTIBALL 165-5002-00	L.P. #59	LED L.P. #60 LEFT POP BUMPER 112-5024-08	LED L.P. #61 RIGHT POP BUMPER 112-5024-08	LED L.P. #62 BOTTOM POP BUMPER 112-5024-08	L.P. #63	L.P. #64
09 Q41 GROUND RED-WHT J12-P10	L.P. #65	L.P. #66	L.P. #67	L.P. #68	L.P. #69	L.P. #70	L.P. #71	L.P. #72
10 Q42 GROUND RED J12-P11	L.P. #73	L.P. #74	L.P. #75	L.P. #76	L.P. #77	L.P. #78	L.P. #79	L.P. #80

« FOR MORE ABOUT LAMP TERMINAL STRIP SLOTS, SEE SEC.5 UNIT 2, PAGES 164-165 »

Wire Color Abbreviations used:

BLK Black	BLU Blue	BRN Brown	GRY Gray	GRN Green	ORG Orange	RED Red	VIO Violet	WHT White	YEL Yellow

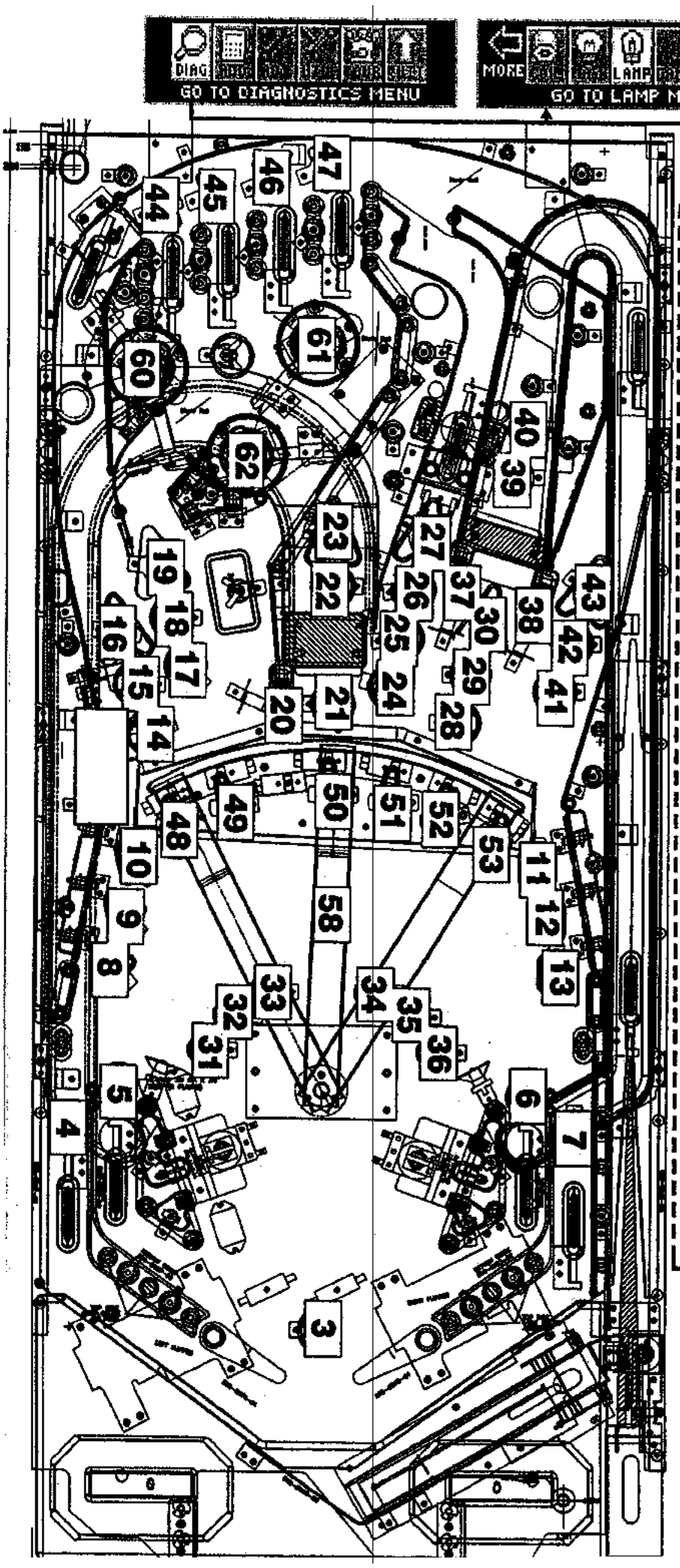

LAMP LOCATIONS
{Lamp Matrix Grid : previous page}

Typical Lamp Wiring & Schematic

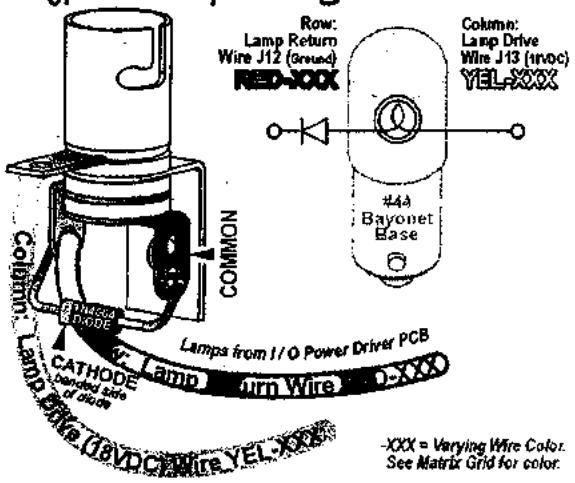

-XXX = Varying Wire Color.
See Matrix Grid for color.

Typical Lamp Wiring & Schematic
... with Lamp Diode on a Terminal Strip (DOT8)

Usually when an LED Module is used as a Controlled Lamp for a Pop Bumper.

... with Lamp Diode on a Terminal Strip (DOT8)

Usually when a #555 Bulb is used as a Controlled Lamp for a Spot Light.

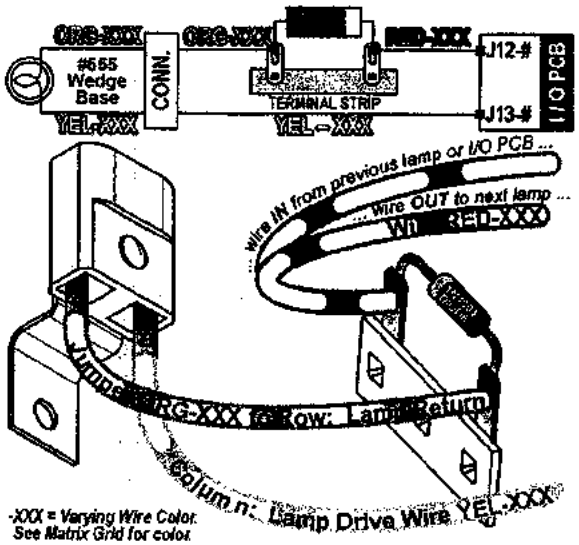

-XXX = Varying Wire Color.
See Matrix Grid for color.

COILS DETAILED CHART TABLE

High Current Coils Group 1		Drive Transistor	Driver Output PCB	Power Line Color	Power Line Connection	Power Voltage	Drive Transistor Control Line Color	D.T. Control Line Connect	Coil GA-Turn or Bulb Type
#1	TROUGH UP-KICKER	Q1	▲ I/O Power Driver ▼	YEL-VIO	J10-P9/10	50VDC	BRN-BLK	J8-P1	26-1200 090-5044-ND
#2	AUTO LAUNCH	Q2		YEL-VIO	J10-P9/10	50VDC	BRN-RED	J8-P3	24-940 090-5036-ND
#3	CENTER LOCKUP (UP)	Q3		YEL-VIO	J10-P9/10	50VDC	BRN-ORG	J8-P4	26-1200 090-5044-ND
#4	CENTER LOCK UP (LATCH)	Q4		YEL-VIO	J10-P9/10	50VDC	BRN-YEL	J8-P5	32-1800 090-5031-00
#5	MAGNET (LEFT)	Q5		VIO-YEL	J10-P8	50VDC	BRN-GRN	J8-P6	22-600 090-5076-00
#6	LEFT CONTROL GATE	Q6		YEL-VIO	J10-P9/10	50VDC	BRN-BLU	J8-P7	32-1250 090-5060-01
#7	MAGNET (RIGHT)	Q7		VIO-YEL	J10-P8	50VDC	BRN-VIO	J8-P8	22-600 090-5076-00
#8	SHAKER MOTOR (OPTIONAL)	Q8		RED-WHT	J17-P7	16VAC	BRN-GRY	J8-P9	502-5027-00
High Current Coils Group 2		**Drive Transistor**	**Driver Output PCB**	**Power Line Color**	**Power Line Connection**	**Power Voltage**	**Drive Transistor Control Line Color**	**D.T. Control Line Connect**	**Coil GA-Turn or Bulb Type**
#9	LEFT POP BUMPER	Q9	▲ I/O Power Driver ▼	YEL-VIO	J10-P9/10	50VDC	BLU-BRN	J8-P1	26-1200 090-5044-ND
#10	RIGHT POP BUMPER	Q10		YEL-VIO	J10-P9/10	50VDC	BLU-RED	J8-P2	26-1200 090-5044-ND
#11	BOTTOM POP BUMPER	Q11		YEL-VIO	J10-P9/10	50VDC	BLU-ORG	J8-P4	26-1200 090-5044-ND
#12		Q12					BLU-YEL	J8-P5	
#13	LEFT SLINGSHOT	Q13		YEL-VIO	J10-P9/10	50VDC	BLU-GRN	J8-P6	26-1200 090-5044-ND
#14	RIGHT SLINGSHOT	Q14		YEL-VIO	J10-P9/10	50VDC	BLU-BLU	J8-P7	26-1200 090-5044-ND
#15	**LEFT FLIPPER (50V RED/YEL)**	Q15		GRY-YEL-3A Fuse-RED-YEL	J10-P6/7	50v DC	ORG-GRY	J8-P8	23-1500 090-5062-ND
#16	**RIGHT FLIPPER (50V RED/YEL)**	Q16		BLU-YEL-3A Fuse-RED-YEL	J10-P6/7	50v DC	ORG-VIO	J8-P9	22-1080 090-5032-ND
Low Current Coils Group 1		**Drive Transistor**	**Driver Output PCB**	**Power Line Color**	**Power Line Connection**	**Power Voltage**	**Drive Transistor Control Line Color**	**D.T. Control Line Connect**	**Coil GA-Turn or Bulb Type**
#17	LEFT UP / DOWN POST	Q17	▲ I/O Power Driver ▼	BRN	J7-P1	20VDC	VIO-BRN	J7-P2	26-1200 090-5044-ND
#18	MICK MOTOR RELAY (LEFT)	Q18		BRN	J7-P1	20VDC	VIO-RED	J7-P3	190-5004-01
#19	MICK MOTOR RELAY (RIGHT)	Q19		BRN	J7-P1	20VDC	VIO-ORG	J7-P4	190-5004-01
#20	FLASH: BACKPANEL (RIGHT)	Q20		ORG	J6-P10	20VDC	VIO-YEL	J7-P6	#89 BULB 165-5000-89
#21	FLASH: BACKPANEL (LEFT)	Q21		ORG	J6-P10	20VDC	VIO-GRN	J7-P7	#89 BULB 165-5000-89
#22	FLASH: RAMP (LEFT)	Q22		ORG	J6-P10	20VDC	VIO-BLU	J7-P8	#89 BULB 165-5000-89
#23	FLASH: LIPS	Q23		ORG	J6-P10	20VDC	VIO-BLK	J7-P9	#161 BULB 165-5032-00
#24	OPTIONAL (e.g. COIN METER)	Q24		RED	J16-P4-8	5VDC	VIO-GRY	J7-P10	COIN METER

Low Current Coils Group 2		Drive Transistor	Driver Output PCB	Power Line Color	Power Line Connection	Power Voltage	Drive Transistor Control Line Color	D.T. Control Line Connect	Coil GA-Turn or Bulb Type
#25	FLASH: RONNIE	Q25	▲ I/O Power Driver ▼	ORG	J6-P10	20VDC	BLK-BRN	J6-P1	#89 BULB 165-5000-89
#26	FLASH: POP BUMPER	Q26		ORG	J6-P10	20VDC	BLK-RED	J6-P2	#89 BULB 165-5000-89
#27	FLASH: CHARLIE	Q27		ORG	J6-P10	20VDC	BLK-ORG	J6-P3	#89 BULB 165-5000-89
#28	FLASH: KEITH	Q28		ORG	J6-P10	20VDC	BLK-YEL	J6-P4	#89 BULB 165-5000-89
#29	FLASH: BOTTOM ARCH (X2)	Q29		ORG	J6-P10	20VDC	BLK-GRN	J6-P5	#89 BULB 165-5000-89
#30	CENTER UP / DOWN POST	Q30		BRN	J7-P1	20VDC	BLK-BLU	J6-P6	26-1100 090-5030-ND
#31	FLASH: ROCK STAR	Q31		ORG	J6-P10	20VDC	BLK-VIO	J6-P7	#89 BULB 165-5000-89
#32	RIGHT UP / DOWN POST	Q32		BRN	J7-P1	20VDC	BLK-GRY	J6-P8	26-1200 090-5044-ND

(Note) Coils #5, #7, #17, #29, #30, & #32 are used on the Preium model.

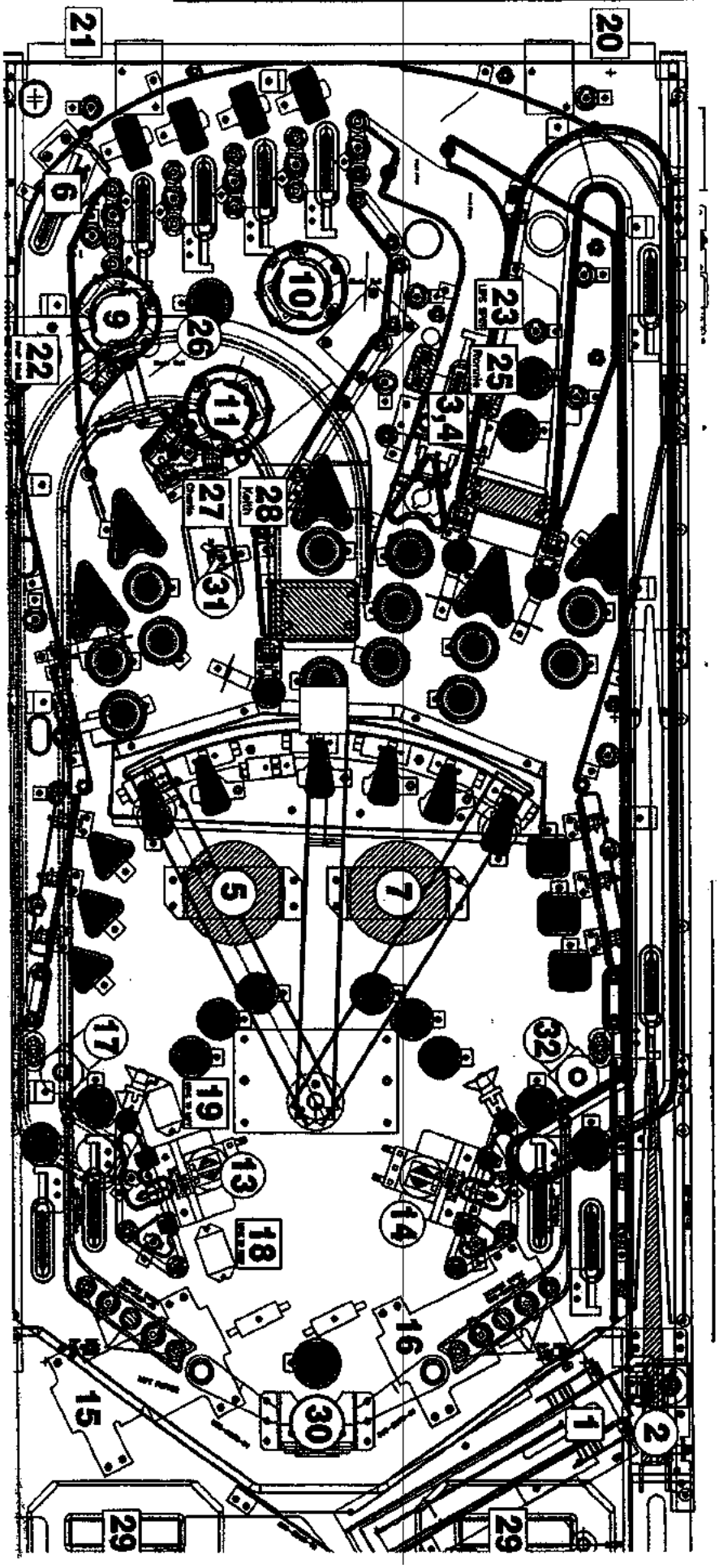

Typical Coil Wiring & Schematic

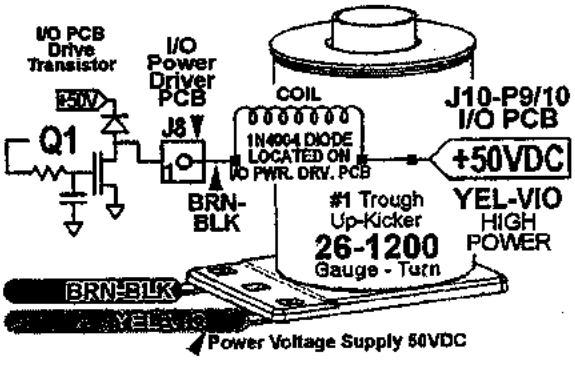

Color = Color of Mini-Mars or Flash Lamp Bulb.

= Coils / Flash Lamps above Playfield.

= Coils / Flash Lamps below Playfield.

= Coils / Flash Lamps on Back Panel.

Coil 024 is Optional. If either a Coin Meter, Token Dispenser or Knocker (all optional equipment) is required, call Technical Support for more information, 1-800-542-5377 or 1-708-345-7700.

Pinball Service Menu Icon Tree

Chapter 2 Chapter 3 Chapter 4 Chapter 5 Chapter 6

For more detailed information on the Menus and, Sub-Menus, review Section 3, Chapters 2—6.

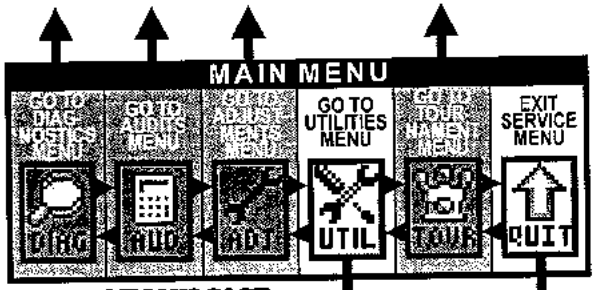

SEE PREVIOUS PAGE.

MORE — These ***non-selectable Icons*** appear in the *selected Menu* only when there are **MORE** *Icons* to the **LEFT** or to the **RIGHT** available for selection. — MORE

EXIT THE SERVICE MENU BY SELECTING THIS ICON IN ANY MENU AND RETURN TO THE ATTRACT MODE.

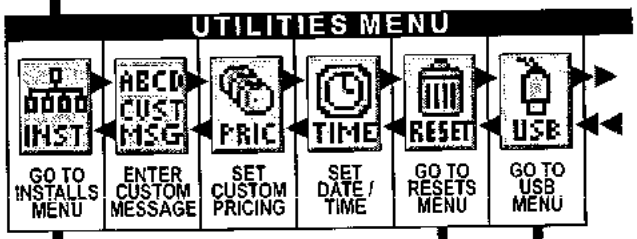

NOTE: Depending on Game Type, Version, selections made, Dip Switch settings, location and/or areas, some *Icons* may appear non-functional *or* may not appear at all. Some *Icons* change depending on selections *(e.g. Selecting and activating the "STRT" Icon [Start Tournament] will be replaced with the "STOP" Icon [Stop Tournament]).* In displays where changes can be made *or* to perform a function, remember, use the GREEN **Button** to go [BACK], exit *or* escape, the **RED Buttons** to [< / –] DECREASE / [+ / >] INCREASE a value *or* setting, and the **BLACK Button** to **[SELECT]** next or as 'OK' / 'ENTER'.

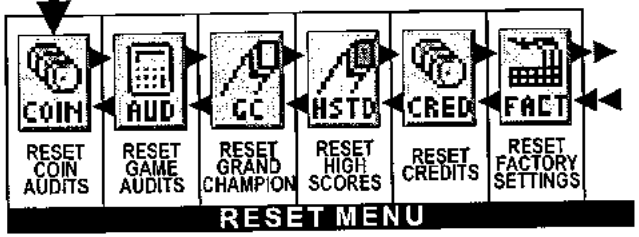

TO UPDATE GAME CODE, MOVE DIP SWITCH #8 TO 'ON' *(on CPU/SND PCB).* PERFORM CPU / SND PCB RESET *PRESS THE WHITE BUTTON.* FOLLOW ON-SCREEN PROMPTS *(REVIEW INSIDE COVER).*

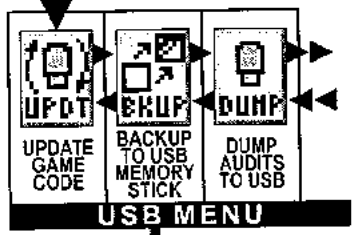

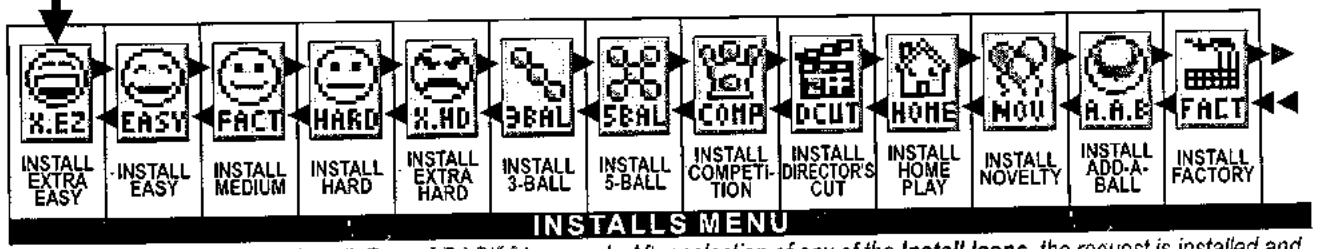

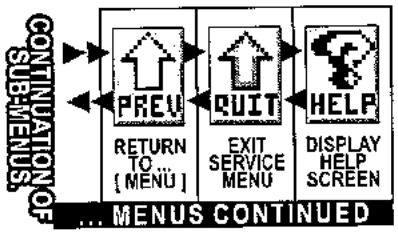

Note: *Press [SELECT] to Install; Press [BACK] to cancel. After selection of any of the* ***Install Icons****, the request is installed and returns to the* ***Install Menu****. The last icon activated before exiting this menu will supercede any previous Icon selected in the group.*

To initiate, from the **MAIN MENU**, select the "AUD" *Icon*. The **AUDITS MENU** provides 99* Audits for accounting purposes and for evaluation of *Game Programming*. The Audits are divided into 4 groups: • **Earnings Audits [#1 – #13]**, • **Standard Audits [#1 – #59]**, • **Feature Audits (Programming Use Only)** [#1 – #+] and , "T AUD" *Icon* provided as an alternate access to Tournament Audits *(*if data is available)*. For more information on the **TOURNAMENT MENU**, *review the Tournament Section (**GO TO TOURNAMENT MENU**). Try the **"DUMP AUDITS TO USB"** feature to create a text file of your audits. Don't forget to set the DATE & TIME in the **UTILITIES MENU**. See the Utilities Section (**GO TO UTILITIES MENU**), for more information.*

Audits which are named **Proprietary** are also for ***Future Expansion*** or ***Programming***. Game code may get upgraded during production; compare all Audits in the Dot Matrix Display with the manual and make any corrections, as necessary. Audits are subject to change *(with or without notice)*.

All **AUDITS MENU** *Icons* and there usages are explained throughout this chapter in the same order as seen in the Dot Matrix Display. ***NOTE:*** Depending on Game Type, Version, selections made, Dip Switch settings, location and/or areas, some *Icons* may appear non-functional *or* may not appear at all. ***Icons** and/or **functions, order** and **operation are subject to change***.

In displays where changes can be made *or* to perform a function, use the **GREEN Button** to go **[BACK]**, exit *or* escape, the **RED Buttons** to [< / –] MOVE BACK / LEFT / [+ / >] MOVE FORWARD / RIGHT to view the next audit in the group, and the **BLACK Button** to **[SELECT]** the sub-menus.

Earnings Audits [#1 – #13]

To initiate, from the **AUDITS MENU**, select the "EARN" *Icon*. The Dot Matrix Display will indicate the *audit number (in this group), audit name* and the *audit total or value*. The current audit will remain on the display until the next audit is viewed or when this sub-menu is exited.

#1 **TOTAL PAID CREDITS [0] :** Total number of *Paid Credits*.

#2 **FREE GAME PERCENTAGE [0%] :** Percentage value is 'Total Free Plays' (Standard Audit **15**) divided by 'Total Plays' (Standard Audit **16**).

#3 **AVERAGE BALL TIME [0:00] :** In seconds, the average ball time is derived from the total play time divided by Standard Audit **1**, Total Balls Played.

#4 **AVERAGE GAME TIME [0:00] :** The average game time is expressed in minutes and seconds.

#5 **COINS THROUGH LEFT SLOT [0] :** Total 'Left Coin Slot' Dedicated Switch (**D-1**) closures.

#6 **COINS THROUGH RIGHT SLOT [0] :** Total 'Right Coin Slot' Dedicated Switch (**D-3**) closures.

#7 **COINS THROUGH CENTER SLOT [0] :** Total 'Center Coin Slot' Dedicated Switch (**D-2**) closures.

#8 **COINS THROUGH FOURTH SLOT [0] :** Total '4th Coin Slot' Dedicated Switch (**D-4**) closures.

#9 **COINS THROUGH FIFTH SLOT [0] :** Total '5th Coin Slot' Dedicated Switch (**D-5**) closures.

#10 **TOTAL COINS [0] :** Total amount of coins registered through all the *Coin Slots*.

#11 **TOTAL EARNINGS [USD 0.00] :** Total cash value accumulated since the last Factory Reset occurred *(reveiw the Utilities Section (**GO TO RESET MENU**), **Reset Coin Audits**)*.

#12 **METER CLICKS [0] :** Total number of money clicks accumulated.
Based on the country's lowest coin denomination used for the game credit.

#13 **SOFTWARE METER [0] :** Continuing total of Meter Clicks.
This audit cannot be reset; the display shows the constant addition of Meter Clicks.

Standard Audits [#1 – #59]

To initiate, from the **AUDITS MENU**, select the "S.P.I." *Icon*. The Dot Matrix Display will indicate the *audit number (in this group), audit name* and the *audit total or value*. The current audit will remain on the display until the next audit is viewed or when this sub-menu is exited.

#1 **TOTAL BALLS PLAYED [0] :** Total number of *Regular* and *Extra Balls*.

#2 **TOTAL EXTRA BALLS [0] :** Total number of *Extra Balls* awarded.

#3 **EXTRA BALLS PERCENTAGE [0%] :** Percentage value is 'Total Extra Balls' (Standard Audit **2**) divided by 'Total Plays' (Standard Audit **16**).

#4 **REPLAY 1 AWARDS [0] :** Total *Awards (Credits, Extra Balls or Scores)* for Level 1.

#5 **REPLAY 2 AWARDS [0] :** Total *Awards (Credits, Extra Balls or Scores)* for Level 2.

#6 **REPLAY 3 AWARDS [0] :** Total *Awards (Credits, Extra Balls or Scores)* for Level 3.

#7 **REPLAY 4 AWARDS [0] :** Total *Awards (Credits, Extra Balls or Scores)* for Level 4.

#8 **TOTAL REPLAYS [0] :** Total *Awards (Credits, Extra Balls or Scores)* for exceeding *Replay Score Levels.*

#9 **REPLAY PERCENTAGE [0%] :** Percentage value is 'Total Replays' (Standard Audit **8**) divided by 'Total Plays' (Standard Audit **16**). *The percentage reflects replay total awards for exceeding replay score levels.*

#10 **TOTAL SPECIALS [0] :** Total *Awards (Credits, Extra Balls, or Scores)* for making *Specials.*

#11 **SPECIAL PERCENTAGE [0%] :** Percentage value is 'Total Specials' (Standard Audit **10**) divided by 'Total Plays' (Standard Audit **16**).

#12 **TOTAL MATCHES [0] :** Total *Credits* awarded for matching the last two digits of the score with the *System-Generated Match Number* at the end of the game. Percentage of *Match Credits* is adjustable from **0%** to **10%** or **OFF** by Standard Adjustment **19**, Match Percentage, *if enabled (review the Adjustments Section (**GO TO ADJUSTMENTS MENU**), **Standard Adjustments**).*

#13 **HIGH SCORE AWARDS [0] :** Total *Awards (Credits, Extra Balls, or Scores)* for exceeding the High-Score-To-Date scores.

#14 **HIGH SCORE PERCENT [0%] :** Percentage value is 'High Score Awards' (Standard Audit **13**) divided by 'Total Plays' (Standard Audit **16**).

#15 **TOTAL FREE PLAYS [0] :** Total *Free Credits* for *Replays, High-Score-To-Date, Specials and Match.*

#16 **TOTAL PLAYS [0] :** This total is derived by adding the sum of 'Total Paid Credits' (Earnings Audit **1**) and 'Total Free Plays' (Standard Audit **15**). *Note: Free credits are not recorded in the Audit until actually used.*

#17 **0.0M–1.99M SCORES [00] :** Total number of games the Player's final score was between **0** and **1,999,990** points.

#18 **2.0M–3.99M SCORES [00] :** Total number of games the Player's final score was between **2,000,000** and **3,999,990** points.

#19 **4.0M–5.99M SCORES [00] :** Total number of games the Player's final score was between **4,000,000** and **5,999,990** points.

#20 **6.0M–7.99M SCORES [00] :** Total number of games the Player's final score was between **6,000,000** and **7,999,990** points.

#21 **8.0M–9.99M SCORES [00] :** Total number of games the Player's final score was between **8,000,000** and **9,999,990** points.

#22 **10.0M–12.49M SCORES [00] :** Total number of games the Player's final score was between **10,000,000** and **12,499,990** points.

#23 **12.5M–14.99M SCORES [00] :** Total number of games the Player's final score was between **12,500,000** and **14,499,990** points.

#24 **15.0M–17.49M SCORES [00] :** Total number of games the Player's final score was between **15,000,000** and **17,499,990** points.

#25 **17.50M–19.99M SCORES [00] :** Total number of games the Player's final score was between **17,500,000** and **19,999,990** points.

#26 **20.0M–24.99M SCORES [00] :** Total number of games the Player's final score was between **20,000,000** and **24,999,990** points.

#27 **25.0M–29.99M SCORES [00] :** Total number of games the Player's final score was between **25,000,000** and **29,999,990** points.

Standard Audits 28-59 continued on the next page.

S.P.I.

#28 **30.0M–39.99M SCORES [00]:** Total number of games the Player's final score was between **30,000,000** and **39,999,990** points.

#29 **40.0M–49.99M SCORES [00]:** Total number of games the Player's final score was between **40,000,000** and **49,999,990** points.

#30 **50.0M–74.99M SCORES [00]:** Total number of games the Player's final score was between **50,000,000** and **74,999,990** points.

#31 **75.0M–99.99M SCORES [00]:** Total number of games the Player's final score was between **75,000,000** and **99,999,990** points.

#32 **100.0M–149.99M SCORES [00]:** Total number of games the Player's final score was between **100,000,000** and **149,999,990** points.

#33 **150.0+M SCORES:** Total number of games the Player's final score was **150,000,000** points and over.

#34 **AVERAGE SCORES [00]:** This total is derived by adding the Final Score of each game to a table and dividing this sum by 'Total Plays' (Standard Audit **16**).

#35 **SERVICE CREDITS [0]:** Total 'Green [SERVICE CREDIT] Button' Dedicated Switch (**D-21**) closures in **Attract Mode** *(not while in the **SERVICE MENU**). See the Service Menu Section, **Service Switch X4 Set Access & Use**, for how to receive Service Credits. See the Utilities Section (**GO TO RESET MENU**), **Reset Credits**, for how to delete credits.*

#36 **BALL SEARCH STARTED [0]:** Total number of times the game performed a *Ball Search.*

#37 **LOST BALL FEEDS [0]:** Total number of times the game added a pinball to play when it could not find a pinball after *Ball Search (review the Diagnostics Section (**GO TO DIAGNOSTICS MENU**), **Technicians Alert** [Pinball Detection]).*

#38 **LOST BALL GAME STARTS [0]:** Total number of times the game started with a pinball missing from the ball trough at the start of a game *(review the Diagnostics Section (**GO TO DIAGNOSTICS MENU**), **Technicians Alert** [Pinball Detection]).*

#39 **LEFT DRAINS [0]:** Total 'Left Outlane' Switch (**24**) closures.

#40 **CENTER DRAINS [0]:** Total number of times the pinball had drained when the last switch closed was not the 'Left Outlane' (**24**) *or* the 'Right Outlane' Switch (**29**).

#41 **RIGHT DRAINS [0]:** Total 'Right Outlane' Switch (**29**) closures.

#42 **TILTS [0]:** Total 'Tilt Pendulum' Dedicated Switch (**D-17**) closures.

#43 **TOTAL BALLS SAVED [0]:** Total number of times this feature was used. This feature is adjustable from **0:01–0:15, AUTO** or **NO BALL SAVES** *(review the Adjustments Section (**GO TO ADJUSTMENTS MENU**), Standard Adj. **48**, Ball Save Time). This feature is enabled at the start of each pinball and is disabled as soon as a predetermined number of switches are "closed" **or** the allocated time has expired.*

#44 **LEFT FLIPPER USED [0]:** Total 'Left Flipper Button' Dedicated Switch (**D-9**) closures in **Game Mode**.

#45 **RIGHT FLIPPER USED [0]:** Total 'Right Flipper Button' Dedicated Switch (**D-11**) closures in **Game Mode**.

#46 **0 - 1 MINUTE GAMES [0]:** Total games in which the total game time was between **0:00** and **1:00** minute.

#47 **1 – 1.5 MINUTE GAMES [0]:** Total games where play time was between **1:00** and **1:30** minutes.

#48 **1.5 – 2 MINUTE GAMES [0]:** Total games where play time was between **1:30** and **2:00** minutes.

#49 **2 – 2.5 MINUTE GAMES [0]:** Total games where play time was between **2:00** and **2:30** minutes.

#50 **2.5 – 3 MINUTE GAMES [0]:** Total games where play time was between **2:30** and **3:00** minutes.

#51 **3 – 3.5 MINUTE GAMES [0]:** Total games where play time was between **3:00** and **3:30** minutes.

#52 **3.5 – 4 MINUTE GAMES [0]:** Total games where play time was between **3:30** and **4:00** minutes.

#53 **4 – 5 MINUTE GAMES [0]:** Total games where play time was between **4:00** and **5:00** minutes.

#54 **5 – 6 MINUTE GAMES [0]:** Total games where play time was between **5:00** and **6:00** minutes.

#55 **6 – 8 MINUTE GAMES [0]:** Total games where play time was between **6:00** and **8:00** minutes.

#56 **8 – 10 MINUTE GAMES [0]:** Total games where play time was between **8:00** and **10:00** minutes.

#57 **10 – 15 MINUTE GAMES [0]:** Total games where play time was between **10:00** and **15:00** minutes.

#58 **15+ MINUTE GAMES [0]:** Total games in which the total game time was **15:00** minutes and over.

#59 **RECENT REPLAY PERCENT [0%]:** *Percent figured with programming thresholds for a determined number of games. The % reflects replay total awards for exceeding replay score levels.*

Feature Audits [#1 - #+]

To initiate, from the **AUDITS MENU**, select the "GAME" *Icon*. The Dot Matrix Display will indicate the *audit number (in this group), audit name* and the *audit total or value*. The current audit will remain on the display until the next audit is viewed or when this sub-menu is exited.

Feature Audits Definition: Programming Use Only. *The proprietary information Total number of times a feature was started, awarded, lit, played and/or completed (awarded); also, the total number of Switch Closures during certain modes or features are tracked (a predetermined single/multiple variations of switch closures are used to determine the lighting and/or completion of the feature stated). **SEE THE DOT MATRIX DISPLAY FOR CURRENT FEATURE AUDITS.***

Feature Audits are subject to change *(with or without notice).* **View Feature Audits on the Dot Display only.** To export all audits to your memory stick *(creating a text file)*, perform the following. Enter the **AUDITS MENU**, then enter the **DUMP AUDITS TO USB**. ***Note:*** *The "DUMP" Icon can also be accessed in the **USB MENU** via the **UTILITIES MENU** (see the Utilities Section (**GO TO USB MENU**) for details).*

"T AUD" *Icon* provided as an alternate access to Tournament Audits *(if data is available)*. For more information on the **TOURNAMENT MENU**, *review the Tournament Section (**GO TO TOURNAMENT MENU**).*

Dump Audits To USB (Memory Stick)

To initiate, from the **USB MENU**, select the "DUMP" *Icon*. Follow the on-screen prompts to perform a **Data Dump** *(download)*. A dated text file will be created on your USB Memory Stick.

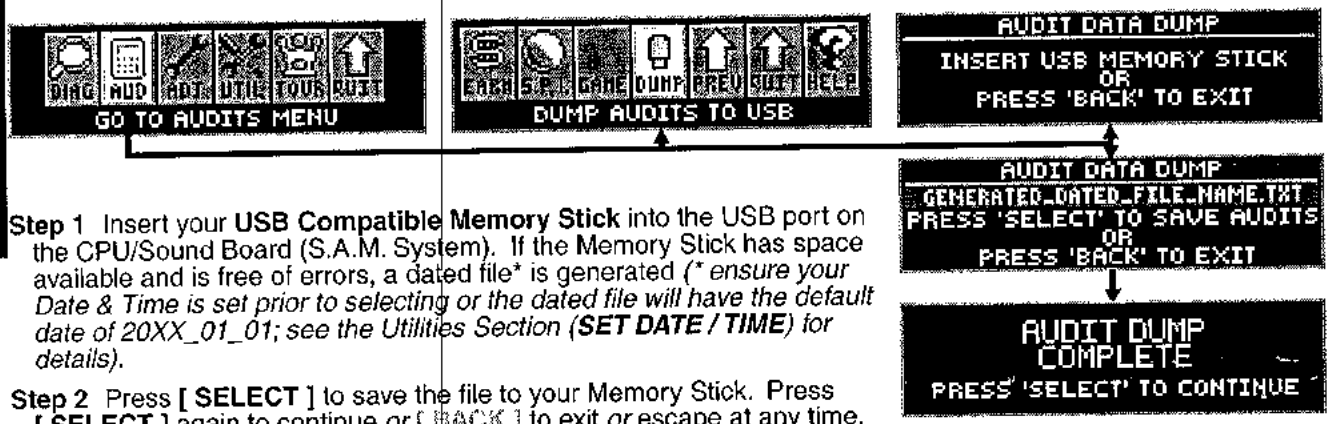

Step 1 Insert your **USB Compatible Memory Stick** into the USB port on the CPU/Sound Board (S.A.M. System). If the Memory Stick has space available and is free of errors, a dated file* is generated *(* ensure your Date & Time is set prior to selecting or the dated file will have the default date of 20XX_01_01; see the Utilities Section (**SET DATE / TIME**) for details).*

Step 2 Press **[SELECT]** to save the file to your Memory Stick. Press **[SELECT]** again to continue *or* [BACK] to exit *or* escape at any time.

Step 3 Remove the Memory Stick and insert into your PC *or* Mac to save the file *(which can then be copied, printed or emailed)*. The audits are numbered sequentially ***without*** a number restart between the three types of audits *(Earnings, Standard and Feature).*

Note: *The "DUMP" Icon can also be accessed in the **USB MENU** via the **UTILITIES MENU** (see the Utilities Section (**GO TO USB MENU**) for details).*

GO TO AUDITS MENU: EARNINGS AUDITS [#1 – #13] / STANDARD AUDITS [#1 – #59]

Perform the below steps to review the audits. Enter the **SERVICE MENU**, then enter the **EARNINGS AUDITS** *or* **STANDARD AUDITS MENUS**. *For audit definitions or summary, review the Audits Section (**GO TO AUDITS MENU**). Try the "**DUMP AUDITS TO USB**" Feature to create a text file of your audits. Don't forget to set the DATE & TIME in the **UTILITIES MENU**. See the Utilities Section (**GO TO UTILITIES MENU**).*

Step 1 Press **[SELECT]**.
Press [BACK] to exit for escape at any time.

Step 2 Press [>]. Go to the "AUD" *Icon*.
Press **[SELECT]**.

Step 3 Press [>]. Go to the "EARN" *or* "S.P.I." *Icon*.
Press **[SELECT]**.

Step 4 Press [<] [>] to move between audits.

EARNINGS AUDITS [#1 – #13] ▼

Nr.	EARNINGS AUDIT NAME	YOUR RESULT
1	TOTAL PAID CREDITS	
2	FREE GAME PERCENTAGE	
3	AVERAGE BALL TIME	
4	AVERAGE GAME TIME	
5	COINS THROUGH LEFT SLOT	
6	COINS THROUGH RIGHT SLOT	
7	COINS THROUGH CENTER SLOT	

Nr.	EARNINGS AUDIT NAME	YOUR RESULT
8	COINS THROUGH FOURTH SLOT	
9	COINS THROUGH FIFTH SLOT	
10	TOTAL COINS	
11	TOTAL EARNINGS	
12	METER CLICKS	
13	SOFTWARE METER	

STANDARD AUDITS [#1 – #59] ▼

Nr.	STANDARD AUDIT NAME	YOUR RESULT
1	TOTAL BALLS PLAYED	
2	TOTAL EXTRA BALLS	
3	EXTRA BALL PERCENTAGE	
4	REPLAY 1 AWARDS	
5	REPLAY 2 AWARDS	
6	REPLAY 3 AWARDS	
7	REPLAY 4 AWARDS	
8	TOTAL REPLAYS	
9	REPLAY PERCENTAGE	
10	TOTAL SPECIALS	
11	SPECIAL PERCENTAGE	
12	TOTAL MATCHES	
13	HIGH SCORE AWARDS	
14	HIGH SCORE PERCENT	
15	TOTAL FREE PLAYS	
16	TOTAL PLAYS	
17	0.0M – 1.99M SCORES	
18	2.0M – 3.99M SCORES	
19	4.0M – 5.99M SCORES	
20	6.0M – 7.99M SCORES	

Nr.	STANDARD AUDIT NAME	YOUR RESULT
21	8.0M – 9.99M SCORES	
22	10.0M – 12.49M SCORES	
23	12.5M – 14.99M SCORES	
24	15.0M – 17.49M SCORES	
25	17.5M – 19.99M SCORES	
26	20.0M – 24.99M SCORES	
27	25.0M – 29.99M SCORES	
28	30.0M – 39.99M SCORES	
29	40.0M – 49.99M SCORES	
30	50.0M – 74.99M SCORES	
31	75.0M – 99.99M SCORES	
32	100.0M – 149.99M SCORES	
33	150.0M+ SCORES	
34	AVERAGE SCORES	
35	SERVICE CREDITS	
36	BALL SEARCH STARTED	
37	LOST BALL FEEDS	
38	LOST BALL GAME STARTS	
39	LEFT DRAINS	
40	CENTER DRAINS	

Nr.	STANDARD AUDIT NAME	YOUR RESULT
41	RIGHT DRAINS	
42	TILTS	
43	TOTAL BALLS SAVED	
44	LEFT FLIPPER USED	
45	RIGHT FLIPPER USED	
46	0 – 1 MINUTE GAMES	
47	1 – 1.5 MINUTE GAMES	
48	1.5 – 2 MINUTE GAMES	
49	2 – 2.5 MINUTE GAMES	
50	2.5 – 3 MINUTE GAMES	
51	3 – 3.5 MINUTE GAMES	
52	3.5 – 4 MINUTE GAMES	
53	4 – 5 MINUTE GAMES	
54	5 – 6 MINUTE GAMES	
55	6 – 8 MINUTE GAMES	
56	8 – 10 MINUTE GAMES	
57	10 – 15 MINUTE GAMES	
58	15+ MINUTE GAMES	
59	RECENT REPLAY PERCENT	

Note: Audits are subject to change (with or without notice).

Standard Adjustment 18, Game Pricing, continued.

USA & International (non-Euro) Standard Pricing Select Table

CPU/SOUND PCB DIP SWITCH SW1 SETTING	COUNTRY SETTING OPTION(S)	COIN MECHANISMS (SWITCHES) COINS THRU ... SLOT: LEFT / CENTER / RIGHT / 4TH	PRICING SCHEME — Number of Plays (Credits) for Price Amount Shown. See "Appendix J" for Coin Cards Examples & Info!	Requires SPI Coin Card(s) Part Number
Pos. 1 2 3 4 5 6 7 8 — Default Highlighted ON OFF ▼ ▼ ▼ ▼ ▼ ▼ ▼ ▼	USA 1 USA 2 USA 3 USA 4 USA 5 USA 6 USA 7 USA 8 USA 9 USA 10	0.25 / 1.00 / 0.25	USD // UNITED STATES DOLLAR // [$] 1/0.25 1/0.50 — 2/0.75 — 3/1.00 1/0.50 1/0.50 — For USA 6 and USA 7 use: 755-5400-02-Y. USA 6 Note: 1 player uses X4 25¢ quarters = 2 plays. However, $1 bill = 3 plays! 1/0.50 \| 2/1.00 — 3/1.50 — 5/2.00 1/0.50 — 2 / 4 X 25¢' — 3 /$ 1.00 Bill 1/0.50 | 2/1.00 — 4/1.50 — 6/2.00 1/0.50 — 3/1.00 1/1.00 1/0.75 — 2/1.50 — 3/2.00	755-5400-01-Y 755-5400-09-Y 755-5400-02-Y 755-5400-02-Y 755-5400-08-Y ◀ Used to promote the Bill Validator. 755-5400-00-Y 755-5400-07-Y 755-5400-11-Y
Pos. 1 2 3 4 5 6 7 8 — Default Highlighted ON ▲ ▲ ▲ ▲ OFF ▼ ▼ ▼ ▼ ▼	AUSTRALIA 1 AUSTRALIA 2	0.20 / 1.00 / 2.00	AUD // AUSTRALIAN DOLLARS // [$AUS] 1/1.00 — 3/2.00 1/1.00	755-5406-00-Y (1 Side)
Pos. 1 2 3 4 5 6 7 8 — Default Highlighted ON ▲ ▲ OFF ▼ ▼ ▼ ▼ ▼ ▼ ON ▲ ▲ ▲ ▲ OFF ▼ ▼ ▼ ▼ ▼	CANADA 1 [25¢ door] CANADA 2 [dollar door]	0.25 / 0.25 / 1.00 / 2.00 1.00 / 2.00	CAD // CANADIAN DOLLARS // [$CAN] 1/0.50 — 2/0.75 — 3/1.00 1/1.00 — 3/2.00	755-5400-00-Y -01-Y or -02-Y 755-5400-10-Y
Pos. 1 2 3 4 5 6 7 8 — Default Highlighted ON ▲ ▲ ▲ OFF ▼ ▼ ▼ ▼ ▼	CROATIA	1 / 2 / 5	HRK // CROATIAN KUNA // [kuna] 1/3 — 2/5	755-5410-00-Y (2-Sided)
Pos. 1 2 3 4 5 6 7 8 — Default Highlighted ON ▲ ▲ ▲ OFF ▼ ▼ ▼ ▼ ▼	DENMARK 1 DENMARK 2	1 / 5 / 10 / 20	DKK // DANISH KRONER // [Kr] 1/3 — 2/5 1/2 — 2/4 — 3/5 — 4/7 — 5/9 — 7/10	755-5402-00-Y (2-Sided)
Pos. 1 2 3 4 5 6 7 8 — Default Highlighted ON ▲ ▲ ▲ OFF ▼ ▼ ▼ ▼ ▼	JAPAN 1 JAPAN 2	100 / 100	JPY // JAPANESE YEN // [¥] 1/100 1/100 — 3/200	755-5408-01-Y (2-Sided)
Pos. 1 2 3 4 5 6 7 8 — Default Highlighted ON ▲ ▲ ▲ ▲ OFF ▼ ▼ ▼ ▼ ▼	LITHUANIA	1 / 2 / 5	LTL // LITHUANIA LITAI // [Lt] 1/2	755-5416-00-Y (1 Side)
Pos. 1 2 3 4 5 6 7 8 — Default Highlighted ON ▲ ▲ ▲ ▲ OFF ▼ ▼ ▼ ▼ ▼	MIDDLE EAST	token / token	TOKEN // Middle East currency used to buy token // [TOKEN] 1/1	755-5416-00-Y (use Side 1)
Pos. 1 2 3 4 5 6 7 8 — Default Highlighted ON ▲ OFF ▼ ▼ ▼ ▼ ▼ ▼ ▼	NEW ZEALAND 1 NEW ZEALAND 2	1 / 2	NZD // NEW ZEALAND DOLLAR // [$NZD] 1/1 1/1 — 3/2	755-5406-00-Y (Side 2)
Pos. 1 2 3 4 5 6 7 8 — Default Highlighted ON ▲ ▲ OFF ▼ ▼ ▼ ▼ ▼ ▼	NORWAY 1 NORWAY 2 NORWAY 3 NORWAY 4	10 / 5 / 20	NOK // NORWEGIAN KRONE // [Kr] 1/10 1/10 — 3/20 1/20 1/20 — 3/40	755-5403-01-Y or -02-Y / (2-Sided) 755-5403-03-Y (2-Sided)
Pos. 1 2 3 4 5 6 7 8 — Default Highlighted ON ▲ ▲ ▲ OFF ▼ ▼ ▼ ▼ ▼	RUSSIA	▼ LEFT SWITCH CAN BE WIRED TO BILL ACCEPTOR ▼ 10 / 5 / 1	RUB // RUSSIAN RUBLE // [Ruble] 1/5	755-5411-00-Y (2-Sided)
Pos. 1 2 3 4 5 6 7 8 — Default Highlighted ON ▲ ▲ OFF ▼ ▼ ▼ ▼ ▼ ▼	SO. AFRICA 1 SO. AFRICA 2	0.50 / 1.00 / 2.00 / 5.00	ZAR // SOUTH AFRICAN RAND // [R] 1/2.00 1/3.00 — 2/5.00	755-5409-01-Y (2-Sided)
Pos. 1 2 3 4 5 6 7 8 — Default Highlighted ON ▲ ▲ ▲ OFF ▼ ▼ ▼ ▼ ▼	SWEDEN 1 SWEDEN 2	1 / 5 / 10	SEK // SWEDISH KRONOR // [kr] 1/10 — 2/15 — 3/20 1/5	755-5404-00-Y (2-Sided)
Pos. 1 2 3 4 5 6 7 8 — Default Highlighted ON ▲ ▲ OFF ▼ ▼ ▼ ▼ ▼ ▼	SWITZERLAND 1 SWITZERLAND 2	1 / 2 / 5	CHF // SWISS FRANCS // [Sf] 1/1 — 2/2 — 3/3 — 4/4 — 6/5 1/1 — 3/2 — 5/3 — 7/4 — 9/5	755-5405-00-Y (2-Sided)
Pos. 1 2 3 4 5 6 7 8 — Default Highlighted ON ▲ ▲ OFF ▼ ▼ ▼ ▼ ▼	TAIWAN	10 / 10	TWD // TAIWANESE DOLLAR // [TWD] 1/10	755-5412-00-Y (use Side 1)
Pos. 1 2 3 4 5 6 7 8 — Default Highlighted ON ▲ ▲ ▲ OFF ▼ ▼ ▼ ▼ ▼	UK 1 UK 2 UK 3 UK 4 UK 5 UK 6	▼ 5TH COIN SLOT NOT AVAILABLE WITH CUSTOM PRICING ▼ LEFT / CENTER / RIGHT / 4TH / 5TH 0.10 / 0.50 / 1.00 / 0.20 / 2£ ▲ Coin Only	GPB // UNITED KINGDOM POUNDS // [£] 3/1.00 — 7/2.00 4/1.00 1/0.50 | 2/1.00 — 3/1.50 — 5/2.00 1/0.30 | 2/0.60 — 3/0.90 — 4/1.00 1/1.00 — 3/2.00 3/2.00 — *use blank side	755-5407-00-Y 755-5407-01-Y* 755-5407-01 755-5407-01-Y* 755-5407-01 755-5407-01-Y*

ATTENTION: UK 5TH COIN SLOT TIED TO 6TH CHANNEL ON ELEC. COIN MECH

HIGHLIGHTED = Factory Default

HIGHLIGHTED = Not Shown on Coin Card

HIGHLIGHTED = Factory Default

HIGHLIGHTED = Not Shown on Coin Card

Standard Adjustment 18, Game Pricing, continued on the next page.

Euro 1-12 Summary & International (Euro) Standard Pricing Select Table

CPU/SOUND PCB DIP SWITCH SW1 SETTING	COUNTRY SETTING OPTION(S)	COIN MECHANISMS (SWITCHES) COINS THRU ... SLOT: LEFT	CENTER	RIGHT	4TH	PRICING SCHEME Number of Plays (Credits) for Price Amount Shown See "Appendix J" for Coin Cards Examples & Info! EUR // EUROPEAN UNION EUROS // [€]	Requires SPI Coin Card(s) Part Number *
Pos. 1 2 3 4 5 6 7 8	Default Highlighted						
ON S E E B E L O W	Euro 1	0.50	1.00	2.00	optional 0.20 optional	1/0.50	755-5401-01-Y
OFF S E T T I N G S	Euro 2					1/0.50 2/1.00 3/1.50 5/2.00	755-5401-02-Y
Euro 1-12 are alternate settings for countries using the Euro.	Euro 3					1/0.50 3/1.00	755-5401-03-Y
	Euro 4					1/0.50 2/1.00 3/1.50 6/2.00	755-5401-04-Y
HIGHLIGHTED = Factory Default	Euro 5					1/0.50 3/1.00 4/1.50 7/2.00	755-5401-05-Y
	Euro 6					2/0.50	755-5401-06-Y
HIGHLIGHTED = Not Shown on Coin Card	Euro 7					1/1.00 2/2.00 3/3.00 5/4.00	755-5401-07-Y
	Euro 8					1/1.00 3/2.00	755-5401-08-Y
	Euro 9					1/1.00 2/1.50 3/2.00	755-5401-09-Y
	Euro 10					1/1.00 3/2.00 7/3.00	755-5401-10-Y
	Euro 11					1/1.00 4/2.00	755-5401-11-Y
	Euro 12					2/1.00 4/2.00 6/3.00 9/4.00	755-5401-12-Y

*For a different **Euro Pricing Scheme** (other than Factory Default listed below), scroll through **Standard Adjustment 18**: Euro 1-12 or CUSTOM* for new setting (reference above Euro 1-12 Summary). Keep the Country Dip Switch Setting the same as listed below.*

| | | | | | |

#22 **TILT WARNINGS:** Set between **0 – 3**. Factory Default = **2**. Set the number of Plumb Bob Tilt Switch closures before the ball in play is tilted. *Each closure generates an audible alert and/or display alert.*

#23 **CREDIT LIMIT:** Set between **4 – 50**. Factory Default = **30**. Set the maximum credits allowed.

#24 **ALLOW HIGH SCORES:** Set to **YES** *or* **NO**. Factory Default = **YES**. When set to **YES**, if a player exceeds the Default Grand Champion *or* 1-4 High Scores, the player may receive a **High Score Award** *(Standard Adjustment 25)* and enter their **3 Initials** *or* **10-Letter Name** *(Standard Adjustment 36)*. Set to **NO** to disable this feature. *The following Standard Adjustments 25-37 are not shown if **NO** is installed.*

#25 **HIGH SCORE AWARD:** Set to **CREDIT**, **TICKET*** or **TOKEN***. Factory Default = **CREDIT**. Set the type of award to be given to the player when the appropriate **Grand Champion Score** *or* **High Score #1 – #4** threshold *or* level is acheived. If awarding a ***CREDIT***, ***TICKET*** *or* ***TOKEN*** is prohibited in your area, install **NO** in **Allow High Scores** (Standard Adjustment 24). *This adjustment is not shown if **NO** is installed in **Allow High Scores** (Standard Adjustment 24).*

**Note: If TICKET or TOKEN is selected, the game will require an optional Ticket or Token Dispenser and then Q24 Option (Standard Adj. 55) must be changed accordingly.*

#26 **GRAND CHAMPION AWARDS:** Set between **0 – 5**. Factory Default = **1**. Set the number of **High Score Award**(s) *(Std. Adj. 25)*, awarded for exceeding the Grand Champion Score *(Standard Adjustment 31)*. *This adjustment is not shown if **NO** is installed in **Allow High Scores** (Standard Adjustment 24).*

#27 **HIGH SCORE #1 AWARDS:** Set between **0 – 3**. Factory Default = 1. Set the number of **High Score Award**(s) *(Std. Adj. 25)*, awarded for exceeding the High Score #1 *(Standard Adjustment 32)*. *This adjustment is not shown if **NO** is installed in **Allow High Scores** (Standard Adjustment 24).*

#28 **HIGH SCORE #2 AWARDS:** Set between **0 – 2**. Factory Default = **0**. Set the number of **High Score Award**(s) *(Std. Adj. 25)*, awarded for exceeding the High Score #2 *(Standard Adjustment 33)*. *This adjustment is not shown if **NO** is installed in **Allow High Scores** (Standard Adjustment 24).*

#29 **HIGH SCORE #3 AWARDS:** Set between **0 – 1**. Factory Default = **0**. Set the number of **High Score Award**(s) *(Std. Adj. 25)*, awarded for exceeding the High Score #3 *(Standard Adjustment 34)*. *This adjustment is not shown if **NO** is installed in **Allow High Scores** (Standard Adjustment 24).*

#30 **HIGH SCORE #4 AWARDS:** Set between **0 – 1**. Factory Default = **0**. Set the number of **High Score Award**(s) *(Std. Adj. 25)*, awarded for exceeding the High Score #4 *(Standard Adjustment 35)*. *This adjustment is not shown if **NO** is installed in **Allow High Scores** (Standard Adjustment 24).*

#31 **GRAND CHAMPION SCORE:** Set between **1,000,000 – 1,000,000,000** *(increments of 1,000,000)*. Factory Default = **__,000,000**. Set the desired **Grand Champion Score** level a player needs to exceed to earn the **High Score Award** *(Standard Adjustment 25)*. A score higher than the default, cannot be reset by Standard Adjustment **37**, **HSTD Reset Count**. *The Grand Champion Score will revert to the Factory Default Score **ONLY** if a **Reset Grand Champion** is performed in the **RESET MENU** (via the **UTILITIES MENU**) or if the game is without power for more than 12 hours after the CPU/Sound PCB Coin Cell Battery is expired or removed. This adjustment is not shown if **NO** is installed in **Allow High Scores** (Standard Adjustment 24).*

#32 **HIGH SCORE #1:** Set between **1,000,000 – 1,000,000,000.** Factory Default = **__,000,000**. Set the desired **High Score #1** level a player needs to exceed to earn the **High Score Award** *(Standard Adjustment 25)*. A score higher than the default, will be reset by Standard Adjustment **37**, **HSTD Reset Count**. *The High Score will revert to the Factory Default Score **ONLY** if a **Reset High Scores** is performed in the **RESET MENU** (via the **UTILITIES MENU**) or if the game is without power for more than 12 hours after the CPU/Sound PCB Coin Cell Battery is expired or removed. This adjustment is not shown if **NO** is installed in **Allow High Scores** (Standard Adjustment 24).*

#33 **HIGH SCORE #2:** Set between **1,000,000 – 1,000,000,000.** Factory Default = **__,000,000.** Set the desired **High Score #2** level a player needs to exceed ... *(continued in Standard Adjustment 32 definition above).*

#34 **HIGH SCORE #3:** Set between **1,000,000 – 1,000,000,000.** Factory Default = **__,000,000.** Set the desired **High Score #3** level a player needs to exceed ... *(continued in Standard Adjustment 32 definition above).*

#35 **HIGH SCORE #4:** Set between **1,000,000 – 1,000,000,000.** Factory Default = **__,000,000.** Set the desired **High Score #4** level a player needs to exceed ... *(continued in Standard Adjustment 32 definition above).*

#36 **HSTD (HIGH SCORE TO DATE) INITIALS:** Set to **3 INITIALS** *or* **10 LETTER NAME**. Factory Default = **3 INITIALS**. When set to **3 INITIALS**, the player is allowed only 3 initials to input. When set to **10 LETTER NAME**, the player is allowed to enter 10 initials to input. *This adjustment is not shown if **NO** is installed in **Allow High Scores** (Standard Adjustment 24).*

Standard Adjustments 37-50 continued on the next page.

#37 **HSTD (HIGH SCORE TO DATE) RESET COUNT:** Set between **100 – 9900** *or* **OFF** *(increments of 100).* Factory Default = **2000.** Set the number of games between "automatic resets" of High Scores back to the Factory Defaults for ***ONLY*** Standard Adj. **32 – 35, High Score #1 – #4.** *The High Score will revert to the Factory Default Scores when the number of games stated is reached.* ***Reset High Scores*** *can be performed in the* ***RESET MENU*** *(via the* ***UTILITIES MENU****) anytime or if the game is without power for more than 12 hours after the CPU/Sound PCB Coin Cell Battery is expired or removed. This adjustment is not shown if* ***NO*** *is installed in* ***Allow High Scores*** *(Standard Adj. 24).*

#38 **FREE PLAY:** Set to **YES** or **NO.** Factory Default = **NO.** When set to **YES**, no coins are required for *Game Play.*

#39 **LANGUAGE:** Set to **ENGLISH, GERMAN, FRENCH, SPANISH** *or* **ITALIAN.** Factory Default = **ENGLISH.** Set the language for the game. Language of game is also shown in the Dot Display *(along with the Game Title and code version)* at the start-up routine which follows a game reset *or* power-up.

#40 **PLAYER LANGUAGE SELECT:** Set to **YES** *or* **NO.** Factory Default = **YES.** When set to **YES**, after the player presses the **Start Button** *(to start a game with adequate credit)*, the player has the option to choose a language by pressing either **Flipper Button** before game start *(options of languages installed are shown on the Dot Display).* ***Note:*** *If set to* ***NO*** *or if only one langauge is installed and the setting is set to* ***YES****, the game will start immediately after the* ***Start Button*** *press. Language(s) available are dependent on game destination from the factory. Other languages may be available on-line for download and installed on your game. With the proper dip switch installed, the langauge option(s) can be changed. For more information or help, call Technical Support at 800-542-5377 (708-345-7700).*

#41 **CUSTOM MESSAGE:** Set to **ON, CHANGE** *or* **OFF.** Factory Default = **ON.** *Shortcut:* ***Enter Custom Message*** *and instructions, review the Utilities Section,* ***Enter Custom Message.***

#42 **FLASH LAMP POWER:** Set to **NORMAL, OFF** *or* **DIM.** Factory Default = **NORMAL.** When set to **DIM**, the Flash Lamps impulse power is reduced by **25%** and when set to **OFF** the Flash Lamps will not flash. For Flash Lamps used in this game, **Go To Flash Lamps Menu** via the **DIAGNOSTICS MENU** *(see the Diagnostics Section).*

#43 **COIL PULSE POWER:** Set to **NORMAL, HARD** *or* **SOFT.** Factory Default = **NORMAL.** When set to **HARD**, the coil pulse power is ***increased*** by **12.5%** of the normal pulse rate. When set to **SOFT** the coil pulse power is ***decreased*** by **12.5%** of the normal pulse rate. This adjustment is provided to compensate for *Low Line* or *High Line voltage* conditions where the solenoids (coils) appear to *kicking too weak or too hard.* Adjust as required.

#44 **KNOCKER VOLUME:** Set to **NORMAL, OFF** *or* **LOW.** Factory Default = **NORMAL.** When set to **LOW**, the volume is decreased 50%. When set to **OFF**, no sound is heard when the "knocker" is sounded. Test the knocker sound in the **Fire Knocker** Test via the **DIAGNOSTICS MENU** *(see Section 3, Chapter 2,* ***GO TO DIAGNOSTICS MENU****, Page 19).*

#45 **GAME RESTART:** Set to **YES** *or* **NO.** Factory Default = **YES.** When set to **YES**, a new game may be started during any ball after the first ball is completed *(if credits allow).* Pressing the Start Button during the first ball will add additional players *(up to 4, if credits allow).* When set to **NO**, the game disables the Start Button after the first ball until the final ball is in play.

#46 **BILL VALIDATOR:** Set to **YES** *or* **NO.** Factory Default = **NO.** When set to **YES**, in ***Game Attract Mode*** an "Insert Bill Animation" is shown in the display *(or just the absense of the Coin Animation).* When set to **NO**, an "Insert Coin Animation" is shown. ***(This adjustment will appear when implemented).***

#47 **MUSIC VOLUME:** Set between **1 – 15.** Factory Default = **1.** After volume is set via Service Buttons this adjustment can be utilized to adjust the background music *(1 all the way on, 15 all the way off)* while keeping the Special Sound Effects at the same level.

#48 **BALL SAVE TIME:** Set between **0:01 – 0:15, AUTO** *or* **NO BALL SAVES.** Factory Default = **0:05.** When set to **NO BALL SAVES** this feature is unavailable. Set between **0:01** through **0:15** *(single increments)* for the ball to be sent back into play if the time set is not met *(per ball).* Set to **AUTO** to automatically adjust the Ball Save Timer based on the average ball time.

#49 **TIMED PLUNGER:** Set to **OFF** *or* **0:01 – 1:00.** Factory Default = **OFF.** The plunger will "Autoplunge" the ball *(at the time set)* when the ball is at the beginning of play, waiting for the player.

#50 **FLIPPER BALL LAUNCH:** Set to **OFF, LEFT FLIPPER, RIGHT FLIPPER, EITHER FLIPPER** *or* **BOTH FLIPPERS.** Default is **OFF.** This feature allows the player to operate the Auto Ball Launch with the Flipper Button(s) depending on which setting is chosen.

Standard Adjustments 51-63 continued on the next page.

#51 **COINDOOR BALL SAVER:** Set to **YES** *or* **NO**. Factory Default = **NO**. When set to **NO**, this feature is not available. When set to **YES**, this feature allows the Coin Door to be opened during game play; the ball will drain but the game will be placed "on hold". When the Coin Door is closed, the pinball will return to the Shooter Lane, and the game will resume. *Useful at locations where technicians change the cash box regularly at exact times of the day where players can be on the game.*

#52 **COMPETITION MODE:** Set to **YES** *or* **NO**. Factory Default = **NO**. When set to **NO**, this feature is not available. Set to **YES**, this feature will equalize random game features and global score values during multi-player games by predetermined competition rules set by programming. If an **Install Competition** was made via the **INSTALLS MENU** *(which automatically changes this setting to **YES**)*, and this setting was changed back to **NO**, the ***Competition Mode*** will be turned **OFF** *(cancelled)*.

#53 **CONSOLATION BALL:** Set to **YES** *or* **NO**. Factory Default = **YES**. When set to **YES**, the ***EXTRA BALL*** *(lamp insert, location varies)* will be lit on the last ball in play, if certain programming criteria is met.

#54 **FAST BOOT:** Set to **YES** *or* **NO**. Factory Default = **YES**. When set to **NO** or if you hold both **Flipper Buttons** during Power-Up, this feature is not available and will display all normal Power-Up screens. When set to **YES**, the game will not display the normal informative Power-Up screens, specifically the CPU Version screen and the Location/Game ID screen. Regardless of the setting, normal Power-Up safety checks are still performed. ***(This adjustment will appear when implemented).***

#55 **Q24 OPTION:** Set to **COIN METER**, **TOKEN DISPENSER** *or* **KNOCKER**. Factory Default = **COIN METER**. This Coil (Solenoid) Location is left "open" at the Factory to allow for these optional Mechanisms to be added to the game. If selecting **TOKEN DISPENSER**, Standard Adjustments 3, 14, 20 & 25 should be changed to **TOKEN**. *Call Tech. Support at 1-800-542-5377 if more information is required on this option.*

#56 **TICKET DISPENSER:** Set to **YES** *or* **NO**. Factory Default = **NO**. *This adjustment is required only for games which have an optional Deltronics (DL-1275-2 PCB Style, SPI Part Nr. 515-7275-00) Ticket Dispenser installed. Unique CPU Sound Bd. Dip Switch Setting required, changes the Default to **YES**.*

#57 **PLAYER COMPETITION:** Set to **YES** *or* **NO**. Factory Default = **YES**. ***Competition Mode*** unrandomizes feature events, and standardizes game play and rule sets *(varies from game to game)* for fair competitions. With at least one credit posted, *or* with the game set for 'FREE PLAY', during the game-over Attract Mode, press the **Left Flipper Button** and hold it in for approximately one second. The following message will appear on the display for approximately 10 seconds: '**COMPETITION MODE READY ... PRESS START NOW**'. If a game is started *(either by pressing the 'START' button for a regular game, or by pressing the 'TOURNAMENT START' button for a tournament game)* while this message appears on the display, then competition mode will be enabled for all players during the game. General rules are covered in the Instruction Card. Other *Hints and/or Rules* can be made known on this game either visually *(the Dot Display or Flashing Light Inserts) or* can be audible.

#58 **TEAM SCORES:** Set to **YES** *or* **NO**. Factory Default = **NO**. Set to **YES**, then Team Play will be made available. ***Team Play only works in a 4-Player Game.*** The totals for Players 1 / 3 (Team 1) & Players 2 / 4 (Team 2) are then displayed individually ***as well as*** the combined score for **BOTH TEAMS** to enable **Team Play (Doubles)**. ***(This adjustment will appear when implemented).***

#59 **LOCATION ID:** Set between **0** to **9999**. Factory Default = **0**. This adjustment allows the operator to assign a location identification number to the audit print-out sheet. *(Will not be affected by a Factory Reset.)*

#60 **GAME ID:** Set between **0** to **9999**. Factory Default = **0**. This adjustment allows the operator to assign a game identification number to the audit print-out sheet. *(Will not be affected by a Factory Reset.)*

#61 **TIME FORMAT:** Set to **12-HOUR** *or* **24-HOUR**. Factory Default = **12-HOUR**. This adjustments determines how the time is displayed. *Time used for Tournament and Data Dumps where a time stamp is required.*

#62 **COIN INPUT DELAY:** Set between **30** to **60** *or* **OFF**. Factory Default = **30**. This adjustment creates a short time delay between the moment the coin is inserted into the **Coin Slot** to the moment the CPU/Sound PCB registers the coin *(30 = approxiamately 1/2 second)*.

#63 **LOST BALL RECOVERY:** Set to **YES** *or* **NO**. Factory Default = **NO**. Set to **YES**, at the start of the 5th consecutive ball search *(with no scoring between searches)*, the game will consider any balls in play to be permanently lost and will attempt to recover from this situation by serving a new ball into play from the ball trough. Set to **NO** *(to suppress this adjustment behavior)* for the game to perform the "ball search" indefinitely until the lost balls are found or replaced.

STANDARD ADJUSTMENTS [#1 – #63] ▼

Nr.	STANDARD ADJUSTMENT NAME	USA DEFAULT	YOUR SETTING
1	REPLAY TYPE	AUTO	
2	‡ REPLAY PERCENTAGE	10%	
3	‡ REPLAY AWARD	CREDIT	
4	‡ REPLAY LEVELS	1	
5	‡ AUTO REPLAY START	__,000,000	
6	‡ DYNAMIC REPLAY START	___,000,000	
7	‡ REPLAY LEVEL #1	___,000,000	
8	‡ REPLAY LEVEL #2	___,000,000	
9	‡ REPLAY LEVEL #3	___,000,000	
10	‡ REPLAY LEVEL #4	__,000,000	
11	‡ REPLAY BOOST	YES	
12	SPECIAL LIMIT	1	
13	‡ SPECIAL PERCENTAGE	10%	
14	SPECIAL AWARD	CREDIT	
15	FREE GAME LIMIT	5	
16	EXTRA BALL LIMIT	5	
17	‡ EXTRA BALL PERCENTAGE	25%	
18	GAME PRICING	USA 10	
19	MATCH PERCENTAGE	9%	
20	MATCH AWARD	CREDIT	
21	BALLS PER GAME	3	
22	TILT WARNINGS	2	
23	CREDIT LIMIT	30	
24	ALLOW HIGH SCORES	YES	
25	HIGH SCORE AWARD	CREDIT	
26	GRAND CHAMPION AWARDS	1	
27	HIGH SCORE #1 AWARDS	1	
28	HIGH SCORE #2 AWARDS	0	
29	HIGH SCORE #3 AWARDS	0	
30	HIGH SCORE #4 AWARDS	0	
31	GRAND CHAMPION SCORE	___,000,000	

Nr.	STANDARD ADJUSTMENT NAME	USA DEFAULT	YOUR SETTING
32	HIGH SCORE #1	___,000,000	
33	HIGH SCORE #2	___,000,000	
34	HIGH SCORE #3	___,000,000	
35	HIGH SCORE #4	___,000,000	
36	HSTD INITIALS	3 INITIALS	
37	HSTD RESET COUNT	2000	
38	FREE PLAY	NO	
39	LANGUAGE	ENGLISH	
40	PLAYER LANGUAGE SELECT	YES	
41	CUSTOM MESSAGE	ON	
42	FLASH LAMP POWER	NORMAL	
43	COIL PULSE POWER	NORMAL	
44	KNOCKER VOLUME	NORMAL	
45	GAME RESTART	YES	
46	BILL VALIDATOR	NO	
47	MUSIC VOLUME	1	
48	BALL SAVE TIME	0:05	
49	TIMED PLUNGER	OFF	
50	FLIPPER BALL LAUNCH	OFF	
51	COINDOOR BALL SAVER	NO	
52	COMPETITION MODE	NO	
53	CONSOLATION BALL	YES	
54	FAST BOOT	YES	
55	Q24 OPTION	COIN METER	
56	TICKET DISPENSER	NO	
57	PLAYER COMPETITION	YES	
58	TEAM SCORES	NO	
59	LOCATION ID	0	
60	GAME ID	0	
61	TIME FORMAT	12-HOUR	
62	COIN INPUT DELAY	30	
63	LOST BALL RECOVERY	YES	

Factory Defaults Settings are subject to change during production (especially Standard Adjustments 2, 4, 5, 13, 16-17, 19, 31-35 & 47).
‡ Not all Standard Adjustments are shown. Depending on the setting (whether Factory Default or if changed by the operator), associated adjustments do not appear, if not required. ***Note:*** *If* ***Game Dip Switch*** *other than USA is installed, different Defaults will appear.*

Feature Adjustments [#1 – #+]

GAME

To initiate, from the **ADJUSTMENTS MENU**, select the "GAME" *Icon*. The Dot Matrix Display will indicate the *adjustment number (in this group), adjust. name, adjust. setting* and *comment line*. The current adjustment will remain on the display until the next adjustment is viewed or when this sub-menu is exited.

>>> **FACTORY RESET** *or* **CODE UPDATE NOTE:** Don't forget, any changes you make to your adjustments will revert back to the Factory Default settings if you perform a Factory Reset or update your Game Code. *See Utilities Section (**GO TO RESETS MENU** and **GO TO USB MENU**).*

View the Coils Detailed Chart Menu to see if this game is Shaker Motor Enabled. *If it is, set the options in the Feature Adjustment as seen below. (typically the last one).*

\# **SHAKER MOTOR (OPTIONAL) :** Set to **NONE**, **MINIMAL USE**, **MODERATE USE** *or* **MAXIMAL USE.** Factory Default = **MODERATE USE.** *Set to any of the varying "**... USES**" if an Optional Shaker Motor Kit (SPI Part Number **502-5027-00**) was installed correctly in this pinball machine. See the assembly (kit) on the last page of Blue Pages (Major Assemblies). Also see Shaker Motor Coil (Q8) in the Coils Detailed Chart Table at the begining of this Service Game Manual or the beginning of the Yellow Pages.*

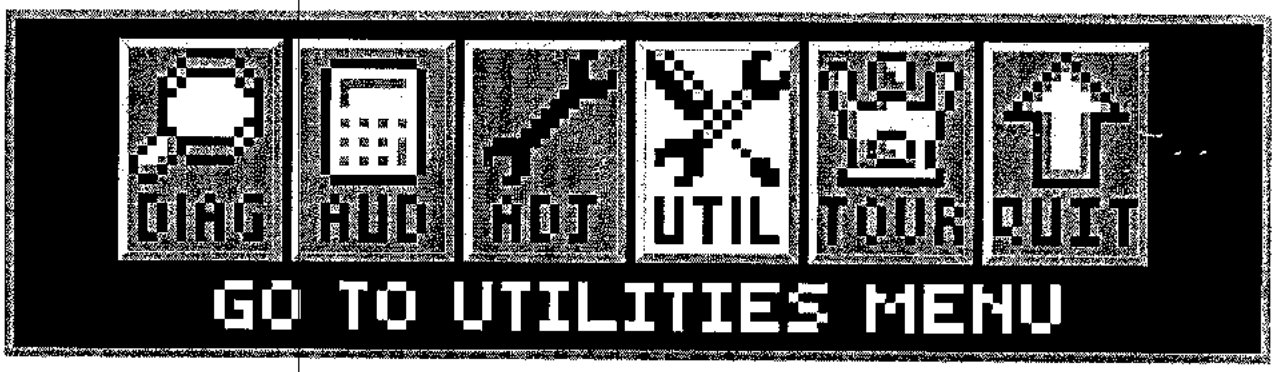

To initiate, from the **MAIN MENU**, select the "UTIL" *Icon*. The **UTILITIES MENU** provides ways to quickly and easily customize your game with **Installs** *(pre-sets for game Standard & Feature Adjustments)*, set-up a **Custom Message** *(short-cut to Standard Adjustment **41, Custom Message**)*, set-up **Custom Pricing** *(short-cut to Standard Adjustment **18, to the Custom Pricing Sub-Menu**)*, set-up the **Date and Time** *(required if the date and time is needed to be accurate for data dumps and for tournaments)*, reset certain particular game data *or* perform a complete **Factory Reset** and to download game data, update or backup game code in the **USB MENU**.

All **UTILITIES, INSTALLS, RESETS MENU** and **USB MENU** *Icons* and there usages are explained throughout this chapter in the same order as seen in the Dot Matrix Display. ***NOTE:*** Depending on Game Type, Version, selections made, Dip Switch settings, location and/or areas, some *Icons* may appear non-functional *or* may not appear at all. ***Installs (Adjustments), Icons** and/or **functions, order** and **operation are subject to change. If in doubt use the Factory Default Settings** (review **Install Factory** on the next page).*

In displays where changes can be made *or* to perform a function, use the **GREEN Button** to go **[BACK]**, exit *or* escape, the **RED Buttons** to [< / –] MOVE BACK / LEFT / [+ / >] MOVE FORWARD / RIGHT to view the next audit in the group, and the **BLACK Button** to **[SELECT]** the sub-menus.

Go To Installs Menu

To initiate, from the **UTILITIES MENU**, select the "INST" *Icon*. The **INSTALLS MENU** provides 13 **Installs** to vary **Game Play Difficulty** *(set with Feature Adjustments) or* **Game Play Type** and **Install Factory** *(restores all adjustments to Factory Defaults).*

For **detailed customization** *or* to check current **Adjustments Defaults** *(either changed by YOU in the Adjustments Menu or by this* **INSTALLS MENU** *or for Factory Default Settings), see Section **3**, Chapter **4**, **GO TO ADJUSTMENTS MENU.*** After completing one or more of the **Installs** in this chapter, go back to the **ADJUSTMENTS MENU** to see which **Standard** *and/or* **Feature Adjustments** have changed *(Feature Adjustments and/or settings are subject to change during production, and may differ than what is described in the tables at the end of this chapter). The Dot Display will indicate if a setting is a Factory Default or not. If the settings are not to your liking, perform **one** of the following:*

1.: **Manually** change the **Standard & Feature Adjustments** Settings *(perform this task in the **ADJUSTMENTS MENU**, see the Adjustments Section).*

2.: **Install Factory** *(see the last install)* on how to reset all of the **Standard & Feature Adjustments** back to the *Factory Default Settings.*

Multiple **Installs can be set** to vary game play; however, for **Installs** that have *one or more* Adjustments in common, the ***last*** "Install" selected & *activated,* will **supersede** any previously changed Adjustment(s) from any prior **Installs**. Any adjustments which you changed and are not affected by the Install will remain as set.

For example, if you want a **5-BALL Game** *set to* **EXTRA EASY:** Select and *activate* the "5BAL" *Icon* first (which will typically change any ***Feature*** Difficulty Adjustments to **HARD**), then select & *activate* the "X.EZ" *Icon* to **change back** the Difficulty Adjustments to **EXTRA EASY**. However, if the "X.EZ" *Icon* was selected & *activated* first, then the "5BAL" *Icon* was selected & *activated,* the game will be set to a **5-BALL Game** *set to* **HARD**.

Remember, use the **GREEN Button** to go **[BACK]**, exit *or* escape and the **BLACK Button** to **[SELECT]** to INSTALL your new setting(s).

Install Extra Easy

To initiate, from the **INSTALLS MENU**, select the "X.EZ" *Icon*. The Dot Matrix Display will indicate the **INSTALL EXTRA EASY**. Follow the on-screen prompts to perform the **Install**. Set the **Game Play Difficulty** level.

Installs Menu continued on the next page.

Installs Menu continued from previous page.

Install Easy

To initiate, from the **INSTALLS MENU**, select the "EASY" *Icon*. The Dot Matrix Display will indicate the **INSTALL EASY**. Follow the on-screen prompts to perform the **Install**. Set the **Game Play Difficulty** level.

Install Medium (Normal or Factory Settings)

To initiate, from the **INSTALLS MENU**, select the "FACT" *Icon*. The Dot Matrix Display will indicate the **INSTALL MEDIUM**. Follow the on-screen prompts to perform the **Install**. Set the **Game Play Difficulty** level.

Install Hard

To initiate, from the **INSTALLS MENU**, select the "HARD" *Icon*. The Dot Matrix Display will indicate the **INSTALL HARD**. Follow the on-screen prompts to perform the **Install**. Set the **Game Play Difficulty** level.

Install Extra Hard

To initiate, from the **INSTALLS MENU**, select the "X.HD" *Icon*. The Dot Matrix Display will indicate the **INSTALL EXTRA HARD**. Follow the on-screen prompts to perform the **Install**. Set the **Game Play Difficulty** level.

Install 3-Ball or 5-Ball

To initiate, from the **INSTALLS MENU**, select either the "3BAL" or "5BAL" *Icons*. The Dot Matrix Display will indicate the **INSTALL 3-BALL** or **5-BALL** depending on choice. Follow the on-screen prompts to perform the **Install**. Set the **Game Play Type** to 3 Balls per game *(Factory Default is 3 Balls per game, not including extra balls earned by the player, if any).*

Install Competition

To initiate, from the **INSTALLS MENU**, select the "COMP" *Icon*. The Dot Matrix Display will indicate the **INSTALL COMPETITION**. Follow the on-screen prompts to perform the **Install**. Set the **Game Play Type** to "Tournament" Rules. *Programming varies and is subject to change.*

Install Director's Cut

To initiate, from the **INSTALLS MENU**, select the "DCUT" *Icon*. The Dot Matrix Display will indicate the **INSTALL DIRECTOR'S CUT**. Follow the on-screen prompts to perform the **Install**. Set the **Game Play Type** to programmer's choice. *Programming varies and is subject to change.*

Install Home Play

To initiate, from the **INSTALLS MENU**, select the "HOME" *Icon*. The Dot Matrix Display will indicate the **INSTALL HOME PLAY**. Follow the on-screen prompts to perform the **Install**. Set the **Game Play Type** to "Home" Rules. *Programming varies and is subject to change.*

Install Novelty

To initiate, from the **INSTALLS MENU**, select the "NOV" *Icon*. The Dot Matrix Display will indicate the **INSTALL NOVELTY**. Follow the on-screen prompts to perform the **Install**. ********** This setting is recommended where local laws restrict certain game features. ********** Set the **Game Play Type** to "Restricted" Rules. *Programming varies and is subject to change.*

Install Add-A-Ball

To initiate, from the **INSTALLS MENU**, select the "A.A.B." *Icon*. The Dot Matrix Display will indicate the **INSTALL ADD-A-BALL**. Follow the on-screen prompts to perform the **Install**. ********** This setting is recommended where local laws restrict certain game features. ********** Set the **Game Play Type** to "Restricted" Rules. *Programming varies and is subject to change.*

Install Factory

To initiate, from the **INSTALLS MENU**, select the "FACT" *Icon*. The Dot Matrix Display will indicate the **INSTALL FACTORY**. Follow the on-screen prompts to perform the **Install**. ⚠**CAUTION!** All **Standard** *and* **Feature Adjustments** which were changed in the **INSTALLS MENU** *or* **ADJUSTMENTS MENU** are returned to the **Factory Defaults** *(as indicated in the Dot Display in the **ADJUSTMENTS MENU**). Note: To perform a complete **Factory Reset, GO TO THE RESETS MENU**. Escape back to the **UTILITIES MENU**, select the "RESET" Icon, then select the "FACT" Icon in the **RESETS MENU** (review the end of this section, **Reset Factory Settings**).*

Enter Custom Message

To initiate, from the **UTILITIES MENU**, select the "ABCD CUST MSG" *Icon.* The **SET CUSTOM MESSAGE** *(a short-cut for Standard Adjustment 41, **Custom Message**)* provides an opportunity to have a text message appear in the the **Attract Mode.** Follow the on-screen prompts to complete [END].

Remember, use the **GREEN Button** to go **[BACK]**, exit *or* escape, the **RED Buttons** to [< / –] MOVE LEFT / CHOOSE NEXT [+ / >] MOVE RIGHT / CHOOSE PREVIOUS, and the **BLACK Button** to **[SELECT]** *as 'OK'.*

Set Custom Pricing

To initiate, from the **UTILITIES MENU**, select the "PRIC" *Icon.* The **CUSTOM PRICING MENU** *(a short-cut for Standard Adjustment **18, Game Pricing**, and setting selected is **CUSTOM**)* provides an opportunity to set **Custom Pricing.**

Note ! ***MONETARY AMOUNT MUST BE SELECTED FIRST!*** Press [BACK] to – DECREASE *or* [SELECT] to + INCREASE the **[< $ >] monetary amount** *(e.g. look at the right side of the display from **$0.25** to **$0.50**).* Press [< / –] to – DECREASE *or* [+ / >] to + INCREASE the **credit quantity** *(e.g. look at the left side of the display from **0 CREDITS AT:** to **1 CREDIT AT:**).*

IF EXAMPLE CUSTOM PRICING SETTING DESIRED IS :
1 Play for **$0.50**, 3 Plays for **$1.00** and 7 Plays for **$2.00**
THEN YOU WILL NEED TO PERFORM THE FOLLOWING :

REMINDER
In these menus:
Press [BACK] to – DECREASE [< $]
Press [SELECT] to + INCREASE [$ >]

Step 1 The starting display appears as below if no prior **Custom Pricing** was installed.

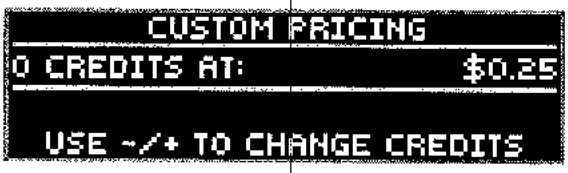

Step 2 Press **[SELECT]** to + INCREASE to **$0.50.**
Press [+ / >] to + INCREASE to 1 CREDIT AT:

Step 3 Press [SELECT] to + INCREASE to **$1.00.**
Press [+ / >] to + INCREASE to 2 CREDITS AT:

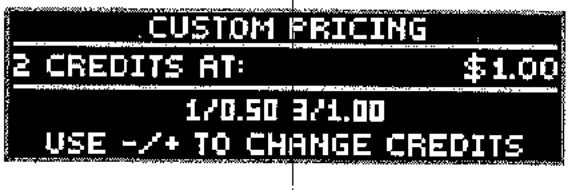

Step 4 Press [SELECT] to + INCREASE to **$2.00.**
Press [+ / >] to + INCREASE to 4 CREDITS AT:

Step 5 Press **[SELECT]** to + INCREASE the amount once *(example = $2.25).*

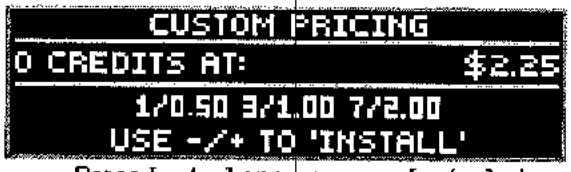

Press [< / –] once *or* press **[+ / >]** *eleven times until INSTALL appears.*

Step 6 Press [SELECT] to INSTALL.
Press [< / –] / [+ / >] *or* [BACK] to edit.

Step 7 Press [**SELECT**], press [BACK] twice to exit the **SERVICE MENU** with your **Custom Pricing** installed.

To correct or make new changes, reenter, which brings you to **Step 6.** Press [BACK] repeatedly until the monetary amount shown is the desired amount and then continue following the above steps with your new or corrected settings. *If you are still having difficulty or if you have any questions, please call Technical Support 800-542-5377 or 708-345-7700, option 1.*

Set Date / Time

To initiate, from the **UTILITIES MENU**, select the "TIME" *Icon*. The **SET TIME MENU** appears with the **MONTH** flashing. Setting the date and time is required for 'Data Dumps' and Tournament Start and End Dates. If the setting of Standard Adjustment **61, Time Format**, is set to **12-HOUR** *(Factory Default)* the time will be expressed in the **AM / PM format**. If Standard Adjustment **61, Time Format**, is set to **24-HOUR** the time will be expressed in the **24-hour format**.

Go To Resets Menu

To initiate, from the **UTILITIES MENU**, select the "RESET" *Icon*. The **RESETS MENU** provides six (6) functions to reset *only the* **Coin Audits**, reset *only the* **Game Audits**, reset *only the* **Grand Champion Score**, reset *only the* **High Score(s)**, reset *only the* paid **Credits** *(includes Service Credits) or* to reset ***ALL DATA*** back to the **Factory Default Settings**.

Reset Coin Audits

To initiate, from the **RESET MENU**, select the "COIN" *Icon*. ⚠ **ONLY** the **Coin Audits** [Earnings Audits **5–12**], will be reset to zero (0), *Factory Default Settings.* Follow the on-screen prompts to perform the **Reset**.

Reset Game Audits

To initiate, from the **RESET MENU**, select the "AUD" *Icon*. ⚠ **ONLY** the **Game Audits** [Earnings Audits **1–4**, Standard Audits **1–59** and Feature Audits **1–XX***], will be reset to zero (0), *Factory Default Settings.* Follow the on-screen prompts to perform the **Reset**. **varies per game title.*

Reset Grand Champion (Score)

To initiate, from the **RESET MENU**, select the "GC" *Icon* ⚠ **ONLY** the **Grand Champion Score** [adjustable via Standard Adjustment **31**], will be reset to *Factory Default Setting.* Follow the on-screen prompts to perform the **Reset**.

Reset High Scores

To initiate, from the **RESET MENU**, select the "HSTD" *Icon*. ⚠ **ONLY** the **High Score(s)** [adjustable via Standard Adjustments **32–35**], will be reset to *Factory Default Setting(s).* Follow the on-screen prompts to perform the **Reset**. ***Note:*** *High Scores (but not Grand Champion Score) are reset automatically every 2,000 games (Factory Default Setting) [adjustable via Standard Adjustment 37,* ***HSTD Reset Count*** *].*

Reset Credits

To initiate, from the **RESET MENU**, select the "CRED" *Icon*. ⚠ **ONLY** the **Credits** *(includes Service Credits)* [adjustable via Standard Adjustment **23, Credit Limit**], will be reset to *zero (0), Factory Default Settings.* Follow the on-screen prompts to perform the **Reset**.

Reset Factory Settings

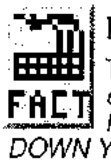

To initiate, from the **RESET MENU**, select the "FACT" *Icon*. ⚠ **ALL GAME DATA IS RESET!** *(with the exception of Earnings Audit 13, Software Meter).* ***NOTE:*** *IF YOU HAD* ***SET-UP CUSTOM PRICING*** *OR HAD CHANGED ANY ADJUSTMENTS OR* ***PERFORMED INSTALLS****, IT IS SUGGESTED TO WRITE DOWN YOUR CHANGES PRIOR TO THE FACTORY RESET.* Follow the on-screen prompts to perform the **Reset**.

Go To USB Menu

To initiate, from the **UTILITIES MENU**, select the "USB" *Icon*. The **USB MENU** provides three (3) functions to download game data, update your game code or backup your code onto a USB Memory Stick. *Review the inside cover for information on how to update your game code.*

Update Game Code

To initiate, from the **USB MENU**, select the "UPDT" *Icon*. Follow the on-screen prompts *or* review the inside cover for more information.

Dump Audits to USB

To initiate, from the **USB MENU**, select the "DUMP" *Icon*. Follow the on-screen prompts to perform a **Data Dump** (download).
Note: *If Icon is not present, access via the Audits Menu, see the Audits Section.*

Backup to USB Memory Stick

To initiate, from the **USB MENU**, select the "BKUP" *Icon.* Follow the on-screen prompts to perform a **Backup** (game code only). This backup feature does not retain adjustments and/or settings changes made.

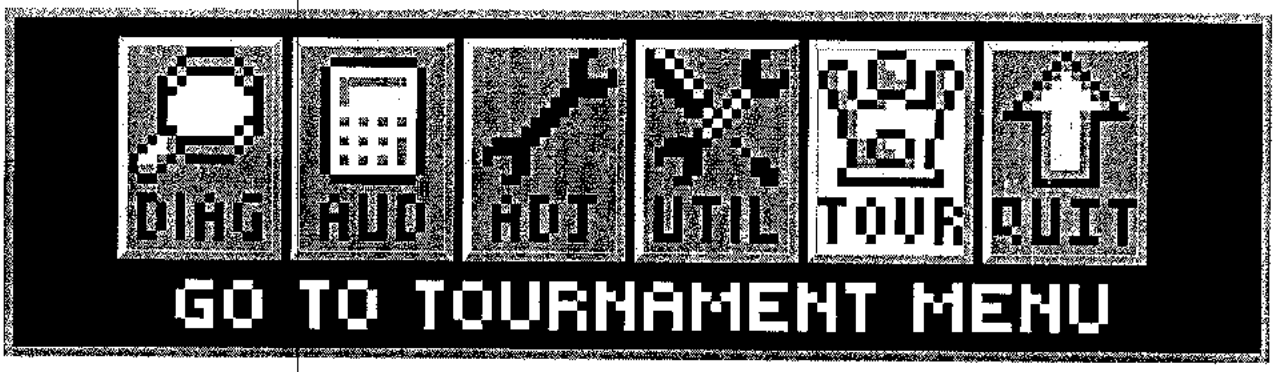

To initiate, from the **MAIN MENU**, select the "TOUR" *Icon*. The **TOURNAMENT MENU** provides ways to quickly and easily start and stop a tournament. Also, tournament data can be viewed *(audits, prize info, etc.)*.

All **TOURNAMENT MENU** *Icons* and there usages are explained throughout this chapter in the same order as seen in the Dot Matrix Display. ***NOTE:*** Depending on Game Type, Version, selections made, Dip Switch settings, location and/or areas, some *Icons* may appear non-functional *or* may not appear at all. ***Icons** and/or **functions, order** and **operation are subject to change.***

In displays where changes can be made *or* to perform a function, use the **GREEN Button** to go **[BACK]**, exit *or* escape, the **RED Buttons** to **[< / –]** HIGHLIGHT PREVIOUS *or* DECREASE / **[+ / >]** HIGHLIGHT NEXT *or* INCREASE to highlight the desired option, and the **BLACK Button** to **[SELECT]** it *or* activate.

Start Tournament

To initiate, from the **TOURNAMENT MENU**, select the "STRT" *Icon*. The **START TOURNAMENT MENU** allows the operator to start a tournament. Select **QUICK START** *or* **CUSTOM** Tournament Start. For the first time Tournament Set-Up, it is recommended to select **CUSTOM**. Follow the on-screen prompts. After completion of all options in **QUICK START** *or* **CUSTOM**, the Tournament is started, the **START TOURNAMENT MENU** is exited and returns to the **TOURNAMENT MENU**.

QUICK START :

Increase or decrease the: • **DAYS, HOURS** *and* **MINUTES** • **PRIZE POOL $ (DOLLAR)** *and* **¢ (CENT) AMOUNT**
• **INCREMENT THE PRIZE POOL PER PLAY INCREASES $** *and* **¢ AMOUNT**

CUSTOM START :

- Confirm the current date and time *(if it was not set previous via the **UTILITIES MENU** it can be set-up in this display as well)*. Enter the **MONTH, DAY, YEAR** and **TIME**
- Choose the Tournament **Start** Date: **MONTH, DAY, YEAR** and **TIME**
- Choose the Tournament **End** Date: **MONTH, DAY, YEAR** and **TIME**

- Choose the **CREDITS** per play desired (01-10). Set the maximum number of *Credits* that may be accumulated per game. ***Note:** The current pricing is displayed; to change pricing **GO TO THE ADJUSTMENTS MENU**.*

Increase or decrease the: • **PRIZE POOL $ (DOLLAR)** *and* **¢ (CENT) AMOUNT**
• **INCREMENT THE PRIZE POOL PER PLAY INCREASES $** *and* **¢ AMOUNT**
• **MAXIMUM (CAP) PRIZE POOL $** *and* **¢ AMOUNT.**

- Increase or decrease the number of **PRIZES** (01-05 **HIGH SCORE**; 02-05 **B'N'W**). Set the maximum # of *Prize Positions* to be awarded during a Tournament. ***Selections are as follows** (% distribution cannot be changed):*

HIGH SCORE:		
Set to **01**	1 Winner	**100%** (1) Prize Pool
Set to **02**	2 Winners	**65%** (1) **35%** (2)
Set to **03**	3 Winners	**50%** (1) **30%** (2) **20%** (3)
Set to **04**	4 Winners	**50%** (1) **25%** (2) **15%** (3) **10%** (4)
Set to **05**	5 Winners	**50%** (1) **20%** (2) **15%** (3) **10%** (4) **5%** (5)

BUMP N' WIN :		
Cannot set to 01. Minimum of 2 winners required.		
Set to **02**	2 Winners	**65%** (1) **35%** (2)
Set to **03**	3 Winners	**50%** (1) **25%** (2) **25%** (3)
Set to **04**	4 Winners	**40%** (1) **20%** (2) **20%** (3) **20%** (4)
Set to **05**	5 Winners	**40%** (1) **15%** (2) **15%** (3) **15%** (4) **15%** (5)

- Select the **AWARD TYPE** (CASH, POINTS, PRIZE, TICKETS *or* NONE). Select **CASH** for the displays to represent the Prize Pool amount *(based on Jackpot Base and Max.)* in ***$Dollars***. Select **POINTS** for the display to represent the Prize Pool amount in ***Points***. Select **PRIZE**, if applicable. Select **TICKET** for the display to represent the Prize Pool amount in ***Tickets***. Select **NONE** ***NOT TO*** represent anything.

Custom Start continued on the next page.

CUSTOM START Continued.

*The following option is available only if **CASH** was selected as the **AWARD TYPE**.*

- Select the option to **SHOW PLAYER CASH** (YES *or* NO). Select **YES** for the display to represent the >>> **previous** <<< Tournament Winners & Cash amount *(or Points, Prizes, etc.)* will show in the ***Attract Mode***.

- Select the kind of **TOURNAMENT** desired (BUMP 'N' WIN *or* HIGH SCORE).

*The following options are available only if **BUMP 'N' WIN** was selected as the **TOURNAMENT TYPE**.*

- Select *or* confirm the **BASE POINT AMOUNT** (00 *or* 1,000,000 – 4,294,967,295 increments of 1,000,000.
- Select *or* confirm the **RANGE AMOUNT** (00 *or* 1,000,000 – 4,294,967,295 increments of 1,000,000).

- Select the **BALLS** per game (1 – 10).

STOP TOURNAMENT

To initiate, from the **TOURNAMENT MENU**, select the "STOP" *Icon*. The **STOP TOURNAMENT MENU** allows the operator to stop a tournament. ***Note:*** *This Icon only appears if a Tournament was set-up and is running (in place of the Start Icon).*

STOP TOURNAMENT ARE YOU SURE?

- Use the **BLACK Button** to **[SELECT]** to confirm. Press the **BLACK Button** again to continue.

The **STOP TOURNAMENT MENU** is exited and returns to the **TOURNAMENT MENU**.

VIEW TOURNAMENT DATA

To initiate, from the **TOURNAMENT MENU**, select the "DATA" *Icon*. If no data is available, the display will indicate NO PREVIOUS DATA. Press the GREEN Button to escape [**BACK**] to the **TOURNAMENT MENU**.

TOURNAMENT AUDITS [#1 – #14]

To initiate, from the **TOURNAMENT MENU**, select the "AUD" *Icon*. The Dot Matrix Display will indicate the *audit number (in this group)*, *audit name* and the *audit total or value*. The current audit will remain on the display until the next audit is viewed or when this sub-menu is exited.

01	**TOTAL PLAYS :** Total number of *Regular* and *Tournament Games* played while a *Tournament is in progress.* This total is derived by adding the below Tournament Audit **02** with ***Regular Plays.***
02	**TOURNAMENT PLAYS :** Total number of *Tournament Games* played while a *Tournament is in progress.*
03	**TOTAL QUALIFYING PLAYS :** Total number of times a player qualified *(invited to enter name).*
04	**TOTAL GAME EARNINGS :** Total Gross Earnings *accepted,* while a *Tournament is active (in progress).*
05	**TOTAL TOUR. EARNINGS :** Earnings *(Audit 04 less Reg. Game Earnings)* while a *Tournament is in progress.*
06	**PRIZE POOL TOTAL :** Total Prize Pool *(Jackpot)* Amount to be paid out while a *Tournament is in progress.*
07	**NET EARNINGS :** Provides the total Net Earnings *(Gross Earnings less Prize Pool)* while a *Tournament is active.*
08	**ACCUM. TOTAL PLAYS :** Accumulative total amount of *Regular & Tournament Games* played since the first Tournament was played.
09	**ACCUM. TOUR. PLAYS :** Accumulative total amount of *Tourn. Games* played since 1st Tournament was played.
10	**ACCUM. QUALIFYING PLAYS :** Accumulative total number of times a player qualified *(invited to enter name).*
11	**ACCUM. EARNINGS :** Total Gross Earnings *accepted,* since the first Tournament was played.
12	**ACCUM. TOUR EARNINGS :** Accumulative total Tournament Game Earnings since the first Tournament was played.
13	**ACCUM. JACKPOT :** Accumulative total of Prize Pool Amounts paid out since the first Tournament was played.
14	**# TOURNAMENTS :** Number of Tournaments *(not individual Games)* since the first Tournament was played.

SIGN MESSAGES A–B

To initiate, from the **TOURNAMENT MENU**, select the "A-B TEXT" *Icon*. *At time of print, menu non-functional. If made available in future code updates, this menu will allow the operator to display "Location" and "Prize" Messages.* Follow the on-screen prompts to complete [END].

Remember, use the **GREEN Button** to go [**BACK**], exit *or* escape, the **RED Buttons** to [< / –] MOVE LEFT / CHOOSE NEXT [+ / >] MOVE RIGHT / CHOOSE PREVIOUS, and the **BLACK Button** to **[SELECT]** *as 'OK'.*

Exit Service Menu

In the **MAIN MENU** and in all **SUB-MENUS** *(where the "QUIT" Icon is present)*, if the "QUIT" *Icon* is selected and *activated*, or the **Green [BACK] Button** is selected repeatedly *(depending on which sub-menu you're in...)*, the **SERVICE MENU Session** will be exited and returned to the ***Attract Mode***.

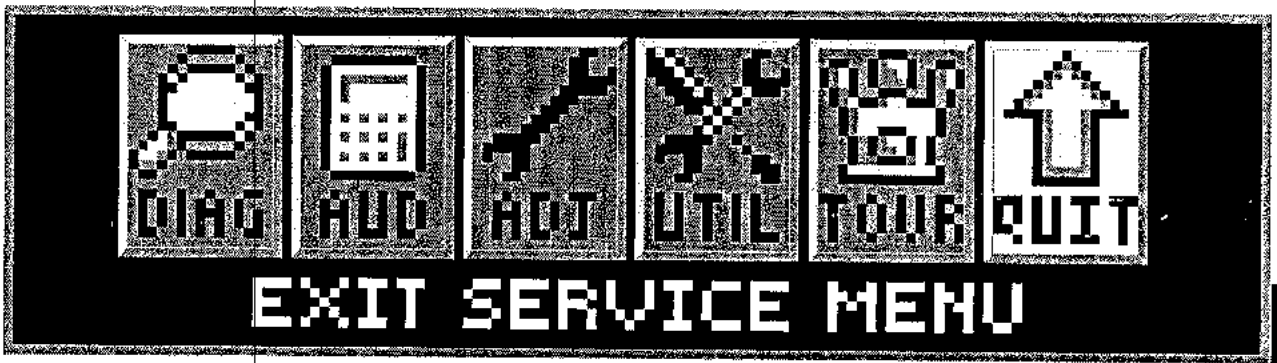

LOOK Turning the game on/off will start the *Power-Up Routine*. Upon **Power-Up**, the DISPLAY will indicate the COUNTRY, FILE VERSION and LANGUAGE(S) installed. LANGUAGE/COUNTRY: change via Dip Switch. LOOK

The below **Problem / Solution Table** was designed to answer some common problems frequently asked.

Problem / Solution Table

PROBLEM	SOLUTION
Will not enter the **SERVICE MENU** after depressing the **Black [SELECT] Button**.	• Check the Service Switches [GREEN, **RED** (x2) & **BLACK Buttons**] for loose connections or bad ground. • Check the associated wiring harness to/from the CPU/Sound Board, Connector **J13**. • Check CPU/Sound Board for possible failure.
All **Service Buttons** [**• • • • Buttons**] appear nonfunctional.	• Check the Service Switches wiring harness for poor or no connection and/or broken wires.
The **Green Button** in the Attract Mode will not enter the **SERVICE CREDITS MENU** to add Service Credits.	• Check to make sure the Game is not in "**Free Play**." *If the game is set to Free Play, adding Service Credits is not required.* • Check the Service Switches wiring harness for poor or no connection and/or broken wires.
The **Display** "blanks out."	• Check the Dot Matrix Display for loose wiring harness for poor or no connection and/or broken wires. • Check **F1** (3/4A Fuse) on the Display Power Supply Board. *Refer to the Yellow Pages (**SCHEMATICS & TROUBLESHOOTING**).*
Icons *"scroll"* along continuously in the **MAIN MENU**.	• Check for a stuck switch on either of the **Red Buttons**.
The **Start** and **Flipper Buttons** do not select or activate *Icons* in the **SWITCH TEST MENU**.	• This is normal. These switches are deactivated, as they are a part of the Switch Test. *Refer to the Diagnostics Section (**GO TO DIAGNOSTICS MENU, Switch Test**).*
Can't move selection of *Icon* with the **Left** and/or **Right Flipper Buttons**.	• Check the **Flipper Buttons** for loose connections or bad Ground and refer to Section **5**, Chapter **2**, Playfield Wiring, #-Flipper Circuit Wiring Diagram. • This is normal ***only*** in ***Diagnostic's Switch & Active Switch Tests*** *(see previous Problem).*
Some *Icons* appear non-functional in the **MENU** or missing.	• Some functionality of the Service Menu may not have been completed during development. If exists, it should only be a non-critical function, such as the "HELP" *Icon*, which will explain the usage of icons. When completed, a software update will correct the problem. Software updates are announced via Service Bulletins (if critical) and on our website **http://www.sternpinball.com/GAME-code.shtml**; view the Game Code Library Message Board Marquee or click **Previous Messages** for past announcements.
In **COIL TEST MENU**, the coils and flashlamps ***do not*** fire after pressing the **Black [SELECT] Button**.	• Ensure the **POWER INTERLOCK SWITCH** ***is pulled out*** *(see the start of this Chapter).*
In the **SERVICE MENU**, the volume cannot be adjusted with either of the **Red Buttons**.	• The Volume adjustment can only be made when in the **Attract Mode** *(see the start of this Chapter).*
In the **SERVICE MENU**, the display seems to lock up, or the Help Display appears to be non-functional.	• If you cannot clear the situation by exiting back one Menu, exit completely out of the **SERVICE MENU**, and re-enter. If the problem persists, call Technical Support for additional help.

IF YOU NOTE ANY OTHER PROBLEMS or HAVE ANY SYMPTOMS NOT DESCRIBED ABOVE, PLEASE CALL TECHNICAL SUPPORT 800-542-5377 (708-345-7700 OPTION #1), SO WE MAY ASSIST YOU.

Backbox Wiring

- Coils Detailed Chart Table
- Backbox I/O Power Driver Board Detailed Wiring Diagram
- Backbox Board Layout Wiring Diagram
  - 128 X 32 Dot Matrix Display PCB (USA) 520-5052-00
  - 128 X 32 Dot Matrix CES-LED // EURO ONLY RoHS // 520-5052-05

Playfield Wiring

- General Illumination Circuit Detailed Wiring Diagram
- Playfield Switch Wiring Diagram
- Playfield Lamp Wiring Diagram
- Playfield Terminal Strips, Fuses & Misc. Wiring Descriptions & Locations
- #-Flipper Circuit Wiring Diagram

Cabinet and Coin Door Wiring

- Transformer Power Wiring Diagram
- Cabinet Wiring Diagram
- Coin Door Wiring Diagram
- Cabinet Universal Voltage Jumper Plugs (for use with Universal AC Cable, 036-5530-00 ONLY)

COILS DETAILED CHART TABLE

High Current Coils Group 1		Drive Transistor	Driver Output PCB	Power Line Color	Power Line Connection	Power Voltage	Drive Transistor Control Line Color	D.T. Control Line Connect	Coil GA-Turn or Bulb Type
#1	TROUGH UP-KICKER	Q1	▲ I / O Power Driver ▼	YEL-VIO	J10-P9/10	50VDC	BRN-BLK	J8-P1	26-1200 090-5044-ND
#2	AUTO LAUNCH	Q2		YEL-VIO	J10-P9/10	50VDC	BRN-RED	J8-P3	24-940 090-5036-ND
#3	CENTER LOCKUP (UP)	Q3		YEL-VIO	J10-P9/10	50VDC	BRN-ORG	J8-P4	26-1200 090-5044-ND
#4	CENTER LOCK UP (LATCH)	Q4		YEL-VIO	J10-P9/10	50VDC	BRN-YEL	J8-P5	32-1800 090-5031-00
#5	MAGNET (LEFT)	Q5		VIO-YEL	J10-P8	50VDC	BRN-GRN	J8-P6	22-600 090-5076-00
#6	LEFT CONTROL GATE	Q6		YEL-VIO	J10-P9/10	50VDC	BRN-BLU	J8-P7	32-1250 090-5060-01
#7	MAGNET (RIGHT)	Q7		VIO-YEL	J10-P8	50VDC	BRN-VIO	J8-P8	22-600 090-5076-00
#8	SHAKER MOTOR (OPTIONAL)	Q8		RED-WHT	J17-P7	16VAC	BRN-GRY	J8-P9	502-5027-00

High Current Coils Group 2		Drive Transistor	Driver Output PCB	Power Line Color	Power Line Connection	Power Voltage	Drive Transistor Control Line Color	D.T. Control Line Connect	Coil GA-Turn or Bulb Type
#9	LEFT POP BUMPER	Q9	▲ I / O Power Driver ▼	YEL-VIO	J10-P9/10	50VDC	BLU-BRN	J8-P1	26-1200 090-5044-ND
#10	RIGHT POP BUMPER	Q10		YEL-VIO	J10-P9/10	50VDC	BLU-RED	J8-P2	26-1200 090-5044-ND
#11	BOTTOM POP BUMPER	Q11		YEL-VIO	J10-P9/10	50VDC	BLU-ORG	J8-P4	26-1200 090-5044-ND
#12		Q12					BLU-YEL	J8-P5	
#13	LEFT SLINGSHOT	Q13		YEL-VIO	J10-P9/10	50VDC	BLU-GRN	J8-P6	26-1200 090-5044-ND
#14	RIGHT SLINGSHOT	Q14		YEL-VIO	J10-P9/10	50VDC	BLU-BLU	J8-P7	26-1200 090-5044-ND
#15	**LEFT FLIPPER (50V RED/YEL)**	Q15		GRY-YEL-3A Fuse-RED-YEL	J10-P6/7	50v DC	ORG-GRY	J8-P8	23-1500 090-5082-ND
#16	**RIGHT FLIPPER (50V RED/YEL)**	Q16		BLU-YEL-3A Fuse-RED-YEL	J10-P6/7	50v DC	ORG-VIO	J8-P9	22-1080 090-5032-ND

Low Current Coils Group 1		Drive Transistor	Driver Output PCB	Power Line Color	Power Line Connection	Power Voltage	Drive Transistor Control Line Color	D.T. Control Line Connect	Coil GA-Turn or Bulb Type
#17	LEFT UP / DOWN POST	Q17	▲ I / O Power Driver ▼	BRN	J7-P1	20VDC	VIO-BRN	J7-P2	26-1200 090-5044-ND
#18	MICK MOTOR RELAY (LEFT)	Q18		BRN	J7-P1	20VDC	VIO-RED	J7-P3	190-5004-01
#19	MICK MOTOR RELAY (RIGHT)	Q19		BRN	J7-P1	20VDC	VIO-ORG	J7-P4	190-5004-01
#20	FLASH: BACKPANEL (RIGHT)	Q20		ORG	J6-P10	20VDC	VIO-YEL	J7-P6	# 89 BULB 165-5000-89
#21	FLASH: BACKPANEL (LEFT)	Q21		ORG	J6-P10	20VDC	VIO-GRN	J7-P7	# 89 BULB 165-5000-89
#22	FLASH: RAMP (LEFT)	Q22		ORG	J6-P10	20VDC	VIO-BLU	J7-P8	# 89 BULB 165-5000-89
#23	FLASH: LIPS	Q23		ORG	J6-P10	20VDC	VIO-BLK	J7-P9	# 161 BULB 165-5032-00
#24	OPTIONAL (e.g. COIN METER)	Q24		RED	J16-P4-8	5VDC	VIO-GRY	J7-P10	COIN METER

Low Current Coils Group 2		Drive Transistor	Driver Output PCB	Power Line Color	Power Line Connection	Power Voltage	Drive Transistor Control Line Color	D.T. Control Line Connect	Coil GA-Turn or Bulb Type
#25	FLASH: RONNIE	Q25	▲ I / O Power Driver ▼	ORG	J6-P10	20VDC	BLK-BRN	J6-P1	# 89 BULB 165-5000-89
#26	FLASH: POP BUMPER	Q26		ORG	J6-P10	20VDC	BLK-RED	J6-P2	# 89 BULB 165-5000-89
#27	FLASH: CHARLIE	Q27		ORG	J6-P10	20VDC	BLK-ORG	J6-P3	# 89 BULB 165-5000-89
#28	FLASH: KEITH	Q28		ORG	J6-P10	20VDC	BLK-YEL	J6-P4	# 89 BULB 165-5000-89
#29	FLASH: BOTTOM ARCH (X2)	Q29		ORG	J6-P10	20VDC	BLK-GRN	J6-P5	# 89 BULB 165-5000-89
#30	CENTER UP / DOWN POST	Q30		BRN	J7-P1	20VDC	BLK-BLU	J6-P6	23-1100 090-5030-ND
#31	FLASH: ROCK STAR	Q31		ORG	J6-P10	20VDC	BLK-VIO	J6-P7	# 89 BULB 165-5000-89
#32	RIGHT UP / DOWN POST	Q32		BRN	J7-P1	20VDC	BLK-GRY	J6-P8	26-1200 090-5044-ND

Y2

Backbox I/O Power Driver Board
(Coils Q1-Q32)
Detailed Wiring Diagram

ALL FUSES RATED 250V SLO-BLO
I/O FUSE CHART INFO IN BACKBOX & PAGE DR. 1

Partial View (520-5249-00)

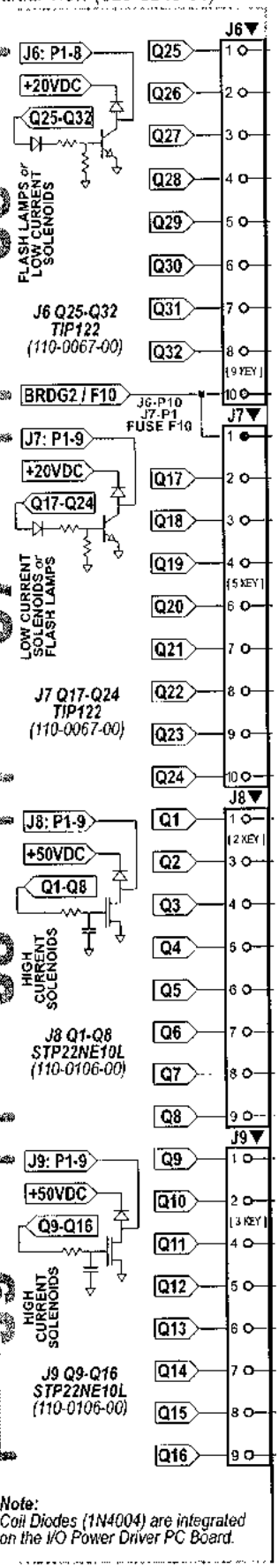

For complete and detailed schematics of the Connectors, Coils, Flash Lamps, Bridges and Fuses noted below, see the I/O Power Driver PCB (Sheets 1 & 2 of 4) in Section 5, Chapter 4, Printed Circuit Boards (PCBs).

Note:
Coil Diodes (1N4004) are integrated on the I/O Power Driver PC Board.

Backbox Board Layout Wiring Diagram

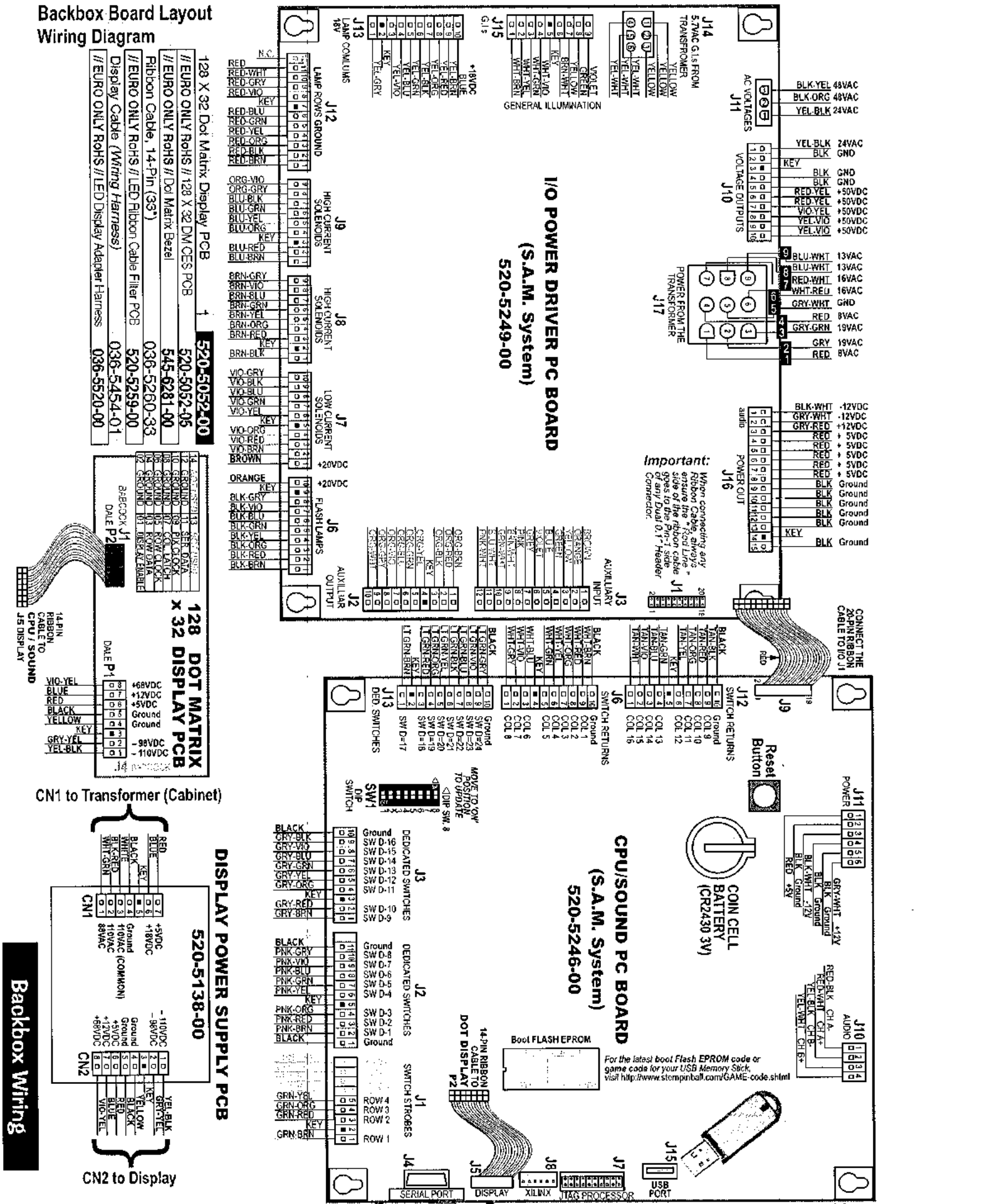

Cabinet Universal Voltage Jumper Plugs *(for use with Universal AC Cable, 036-5530-00 ONLY)*

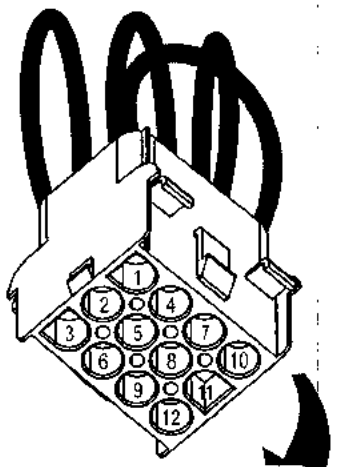

12-PIN FEMALE SIDE TO JUMPER
12-PIN MALE SIDE CONNECTOR

JUMPER PLUG ▼
(SPI PART #036-5530-120)
110+VAC
N. AMERICA
LINE VOLTAGE

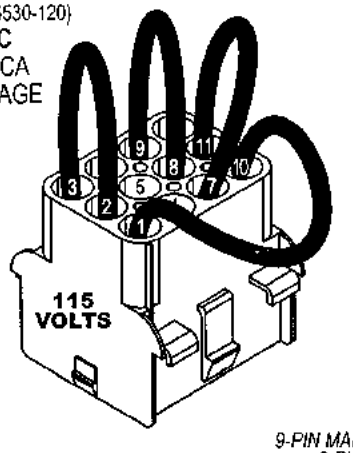

9-PIN MALE SIDE TO TRANSFORMER
9-PIN FEMALE SIDE CONN.

12-PIN F/M CONN.
BACK VIEW ▲

1 BLK
2 BLK
3 WHT-BLK
4 WHT-BRN
5 WHT-BRN
6 BRN (or YEL-WHT)
7 WHT-ORG
8 WHT-ORG
9 ORG
10 BLK
11 WHT
12 N/U

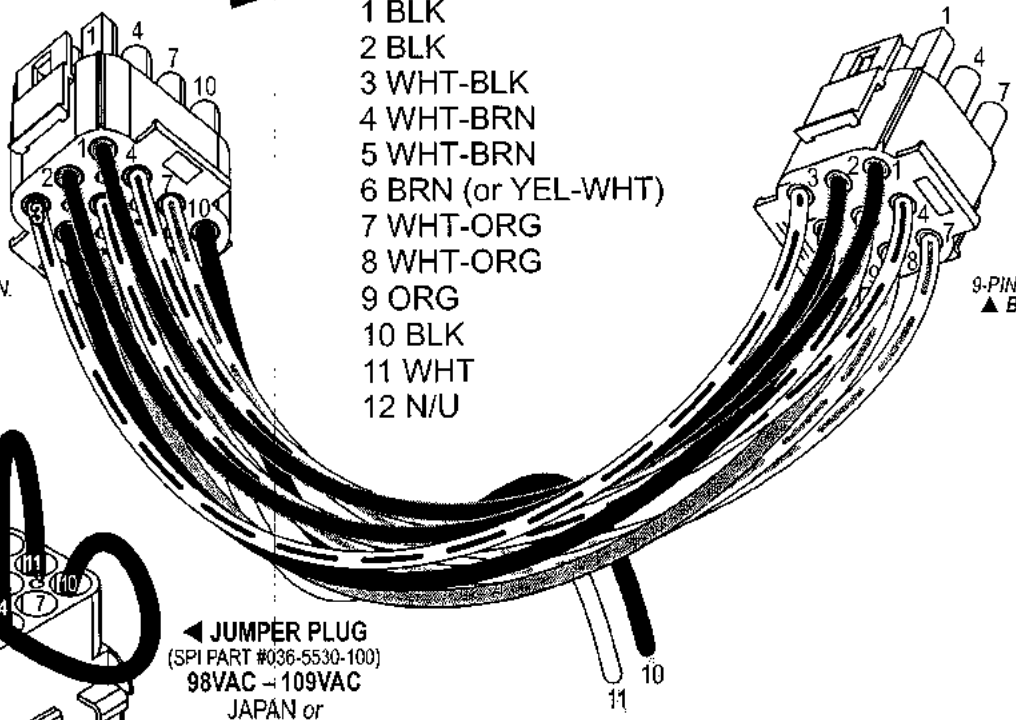

9-PIN F/M CONN.
▲ BACK VIEW

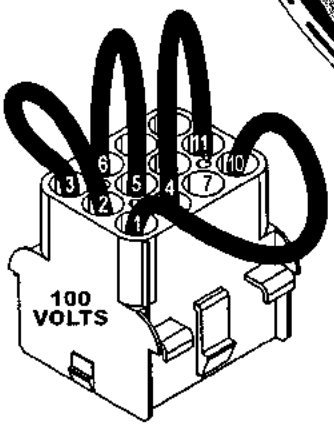

◄ JUMPER PLUG
(SPI PART #036-5530-100)
98VAC – 109VAC
JAPAN *or*
N. AMERICA LOW
LINE VOLTAGE

10
11

Black & White wires from the POWER BOX, cabinet bottom to 12-Pin Conn., Pins 10 & 11..

JUMPER PLUG ▼
(SPI PART #036-5530-206)
200VAC – 211VAC
EUROPE *and*
MID. EAST LOW
LINE VOLTAGE

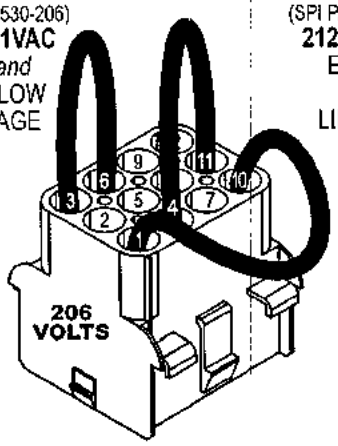

JUMPER PLUG ▼
(SPI PART #036-5530-220)
212VAC – 224VAC
EUROPE *and*
MID. EAST
LINE VOLTAGE

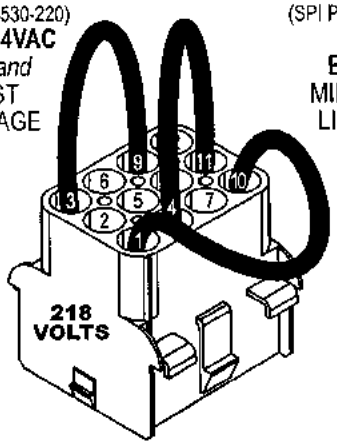

JUMPER PLUG ▼
(SPI PART #036-5530-230)
225+VAC
EUROPE *and*
MID. EAST HIGH
LINE VOLTAGE

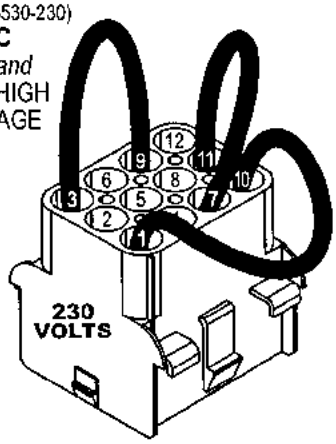

Transformer Power Wiring Diagram

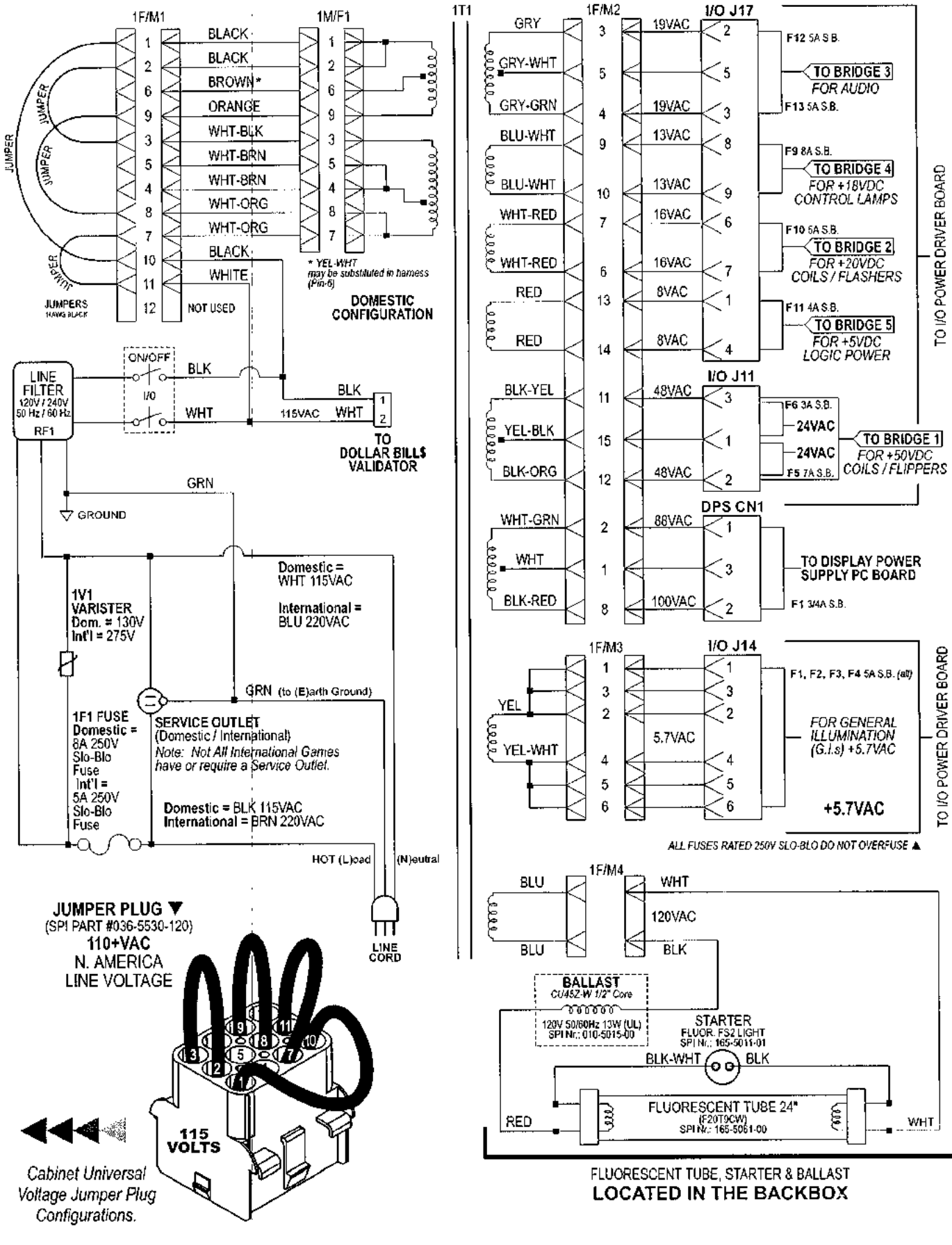

Cabinet Wiring Diagram

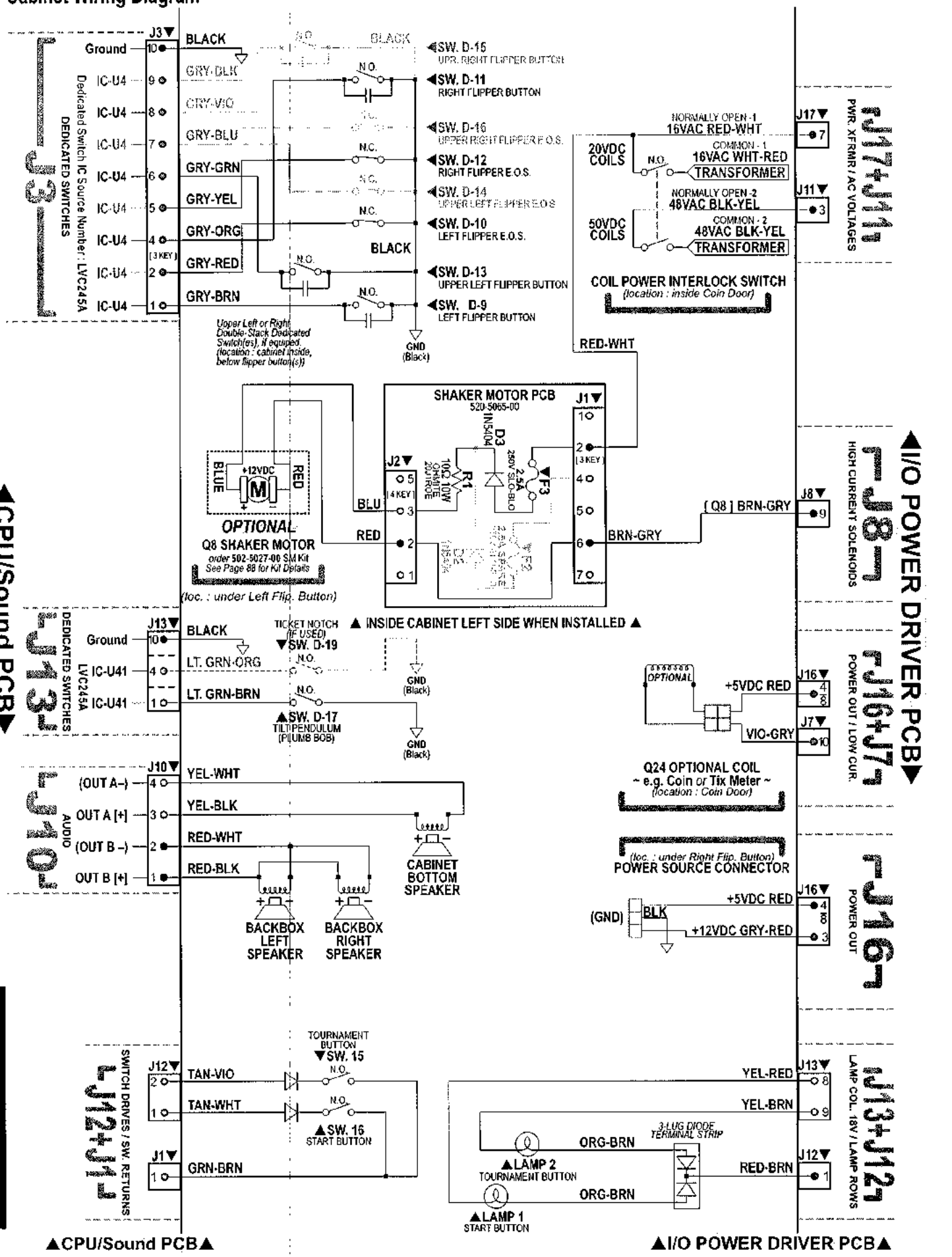

Coin Door Wiring Diagram

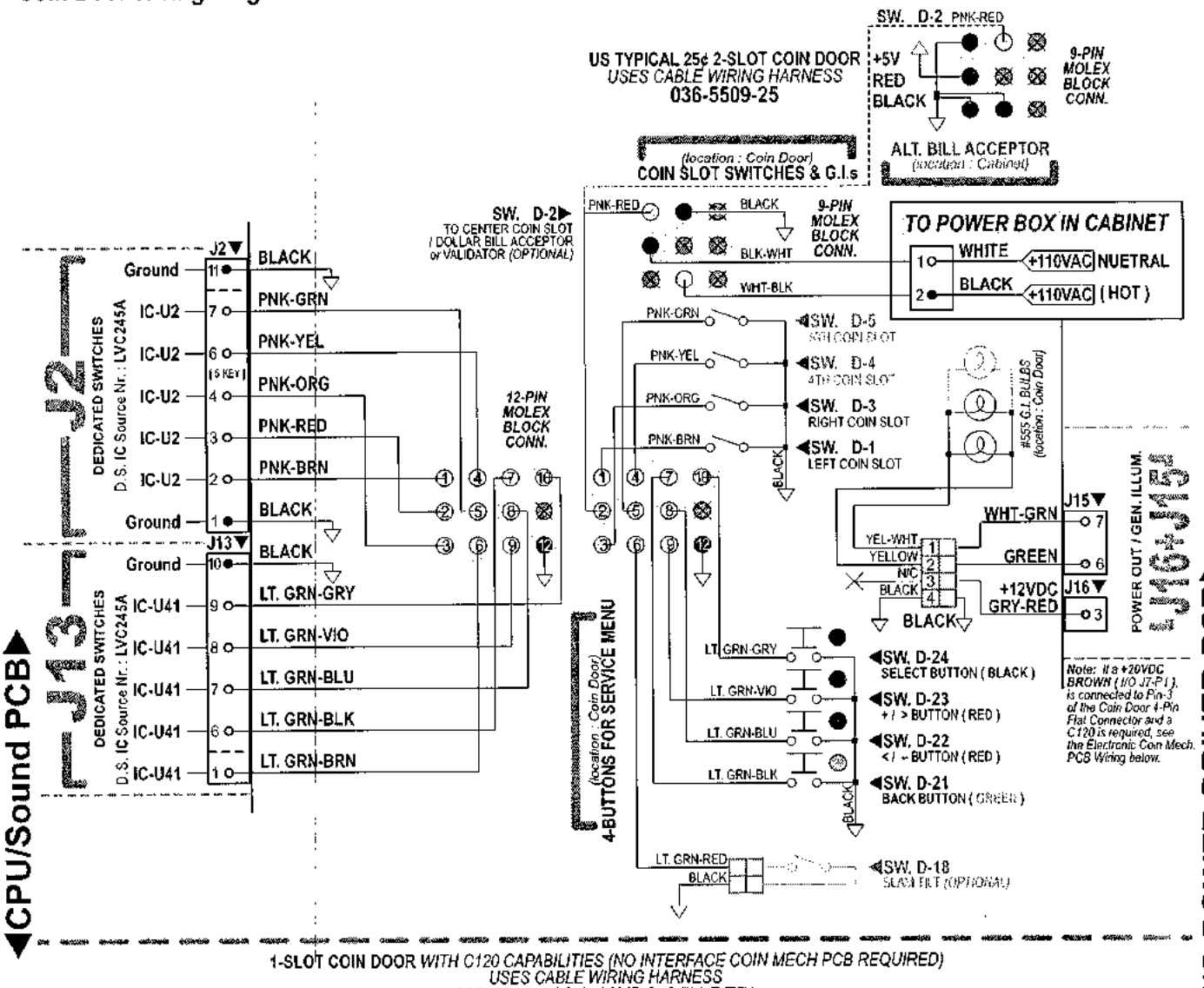

1-SLOT COIN DOOR *WITH C120 CAPABILITIES (NO INTERFACE COIN MECH PCB REQUIRED)*
USES CABLE WIRING HARNESS
036-5509-31A (+12VDC GRY-RED)

036-5509-31B (ICT/KAL ONLY) / 036-5509-31C (ODA ONLY) / 036-5509-31D (SPAIN ONLY)

NON-US NON-C120 2-SLOT COIN DOOR
USES CABLE WIRING HARNESS
036-5509-32

NON-US NON-C120 3-SLOT COIN DOOR
USES CABLE WIRING HARNESS
036-5509-33

IF YOUR GAME HAS AN ELECTRONIC COIN MECH. INTERFACE PC BOARD (520-5193-00):

1-SLOT COIN DOOR *USE WITH C120 CAPABILITIES REQUIRING PCB 520-5193-00*
USES CABLE WIRING HARNESS
036-5509-31 (S.A.M. SYSTEM)

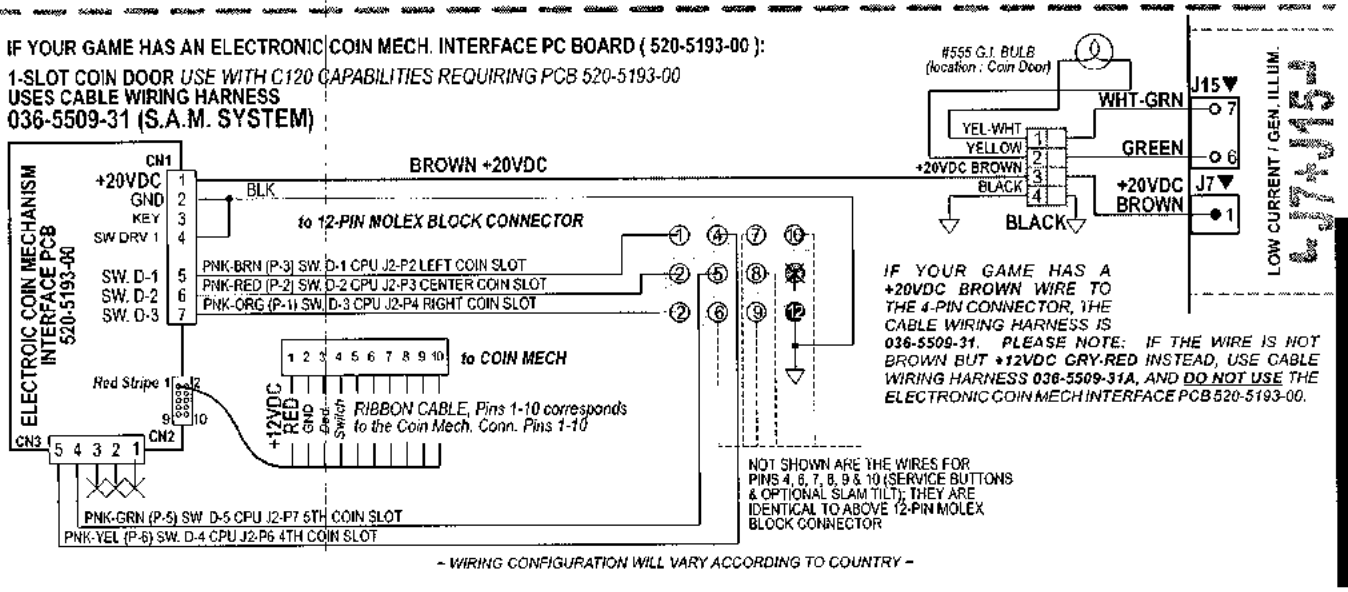

- WIRING CONFIGURATION WILL VARY ACCORDING TO COUNTRY -

General Illumination Circuit Detailed Wiring Diagram

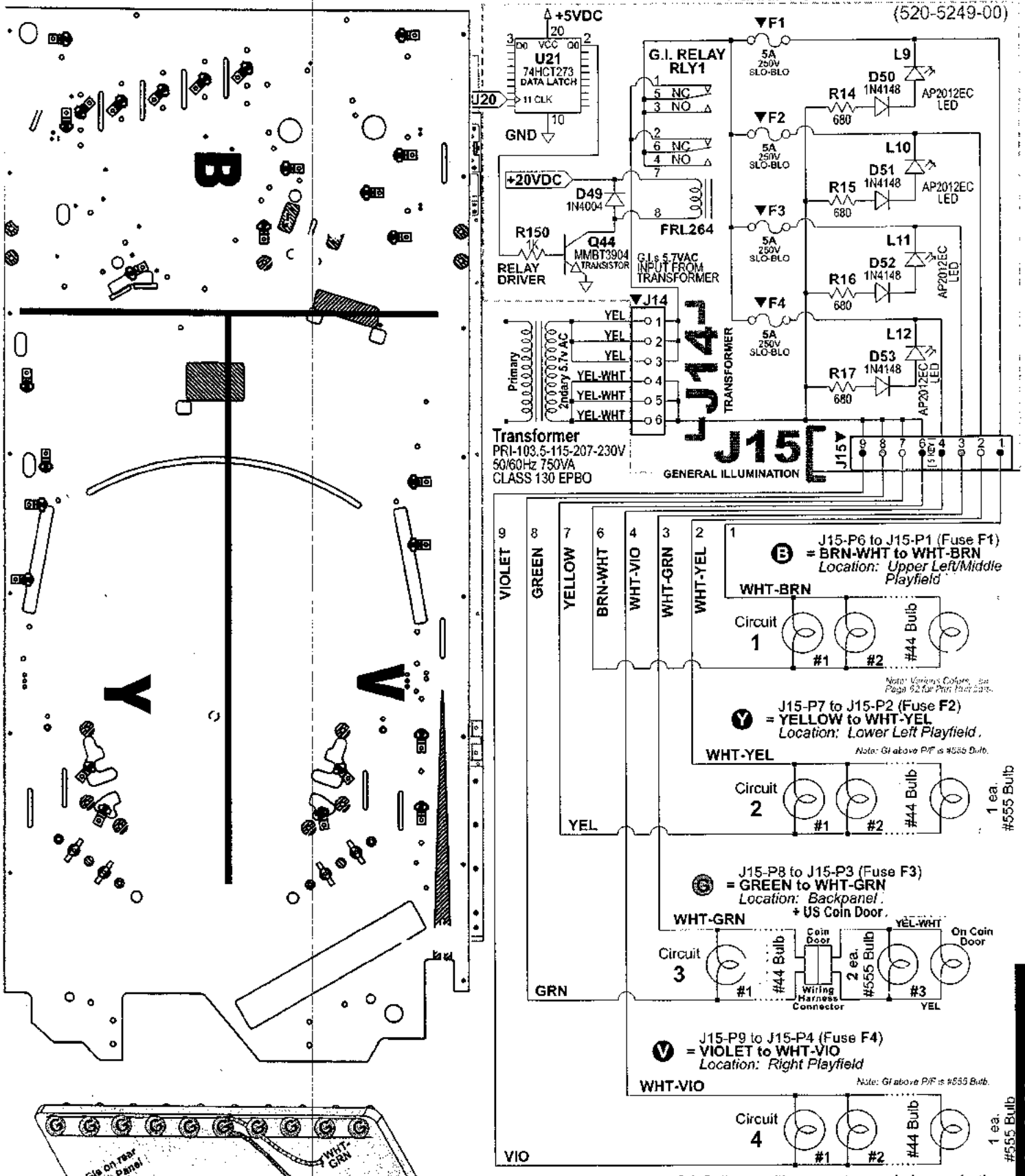

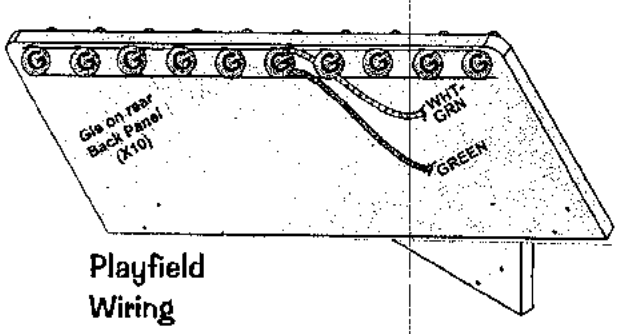

Playfield Wiring

Playfield Switch Wiring Diagram

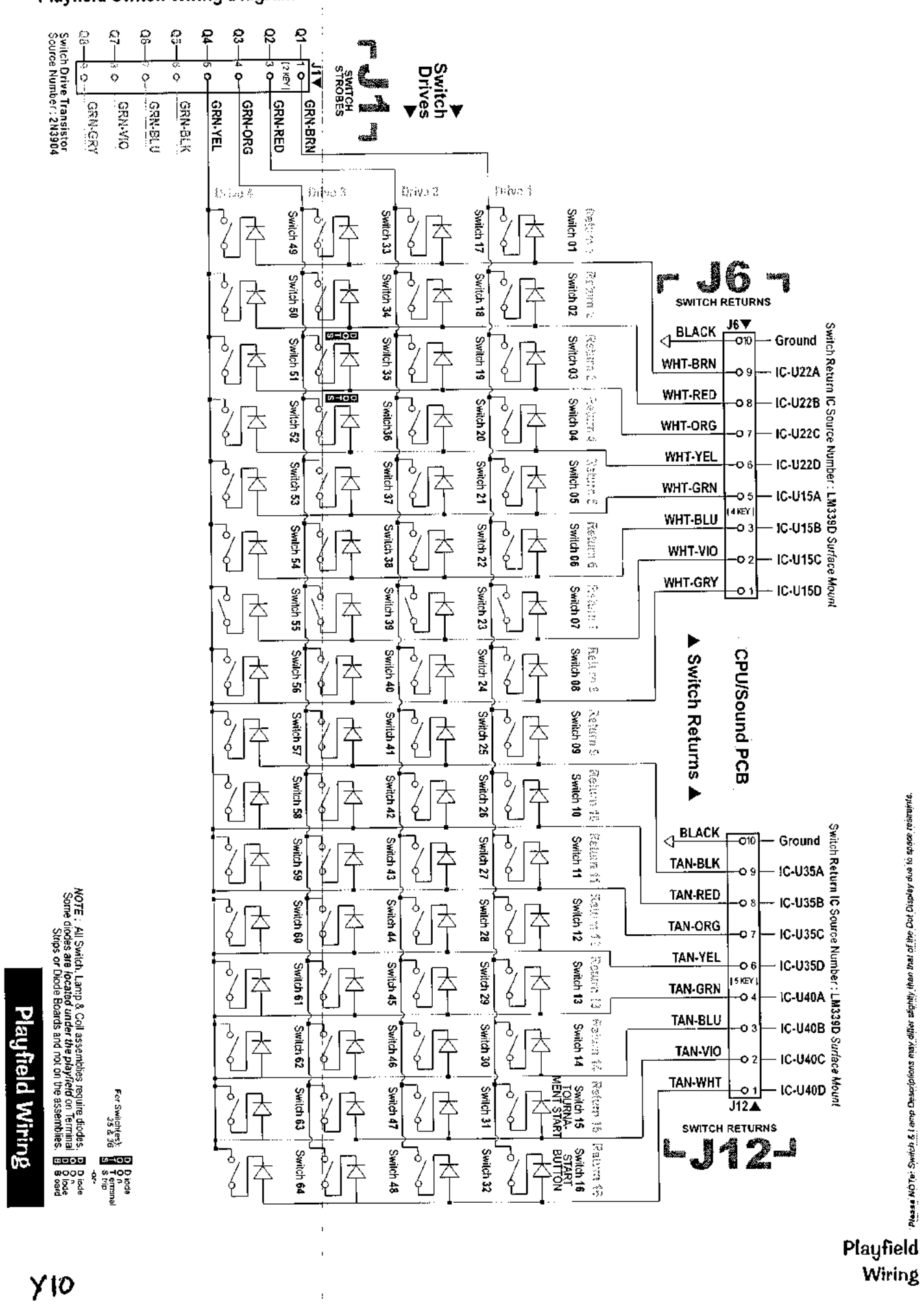

Playfield Wiring

Y10

Playfield Wiring

Playfield Lamp Wiring Diagram

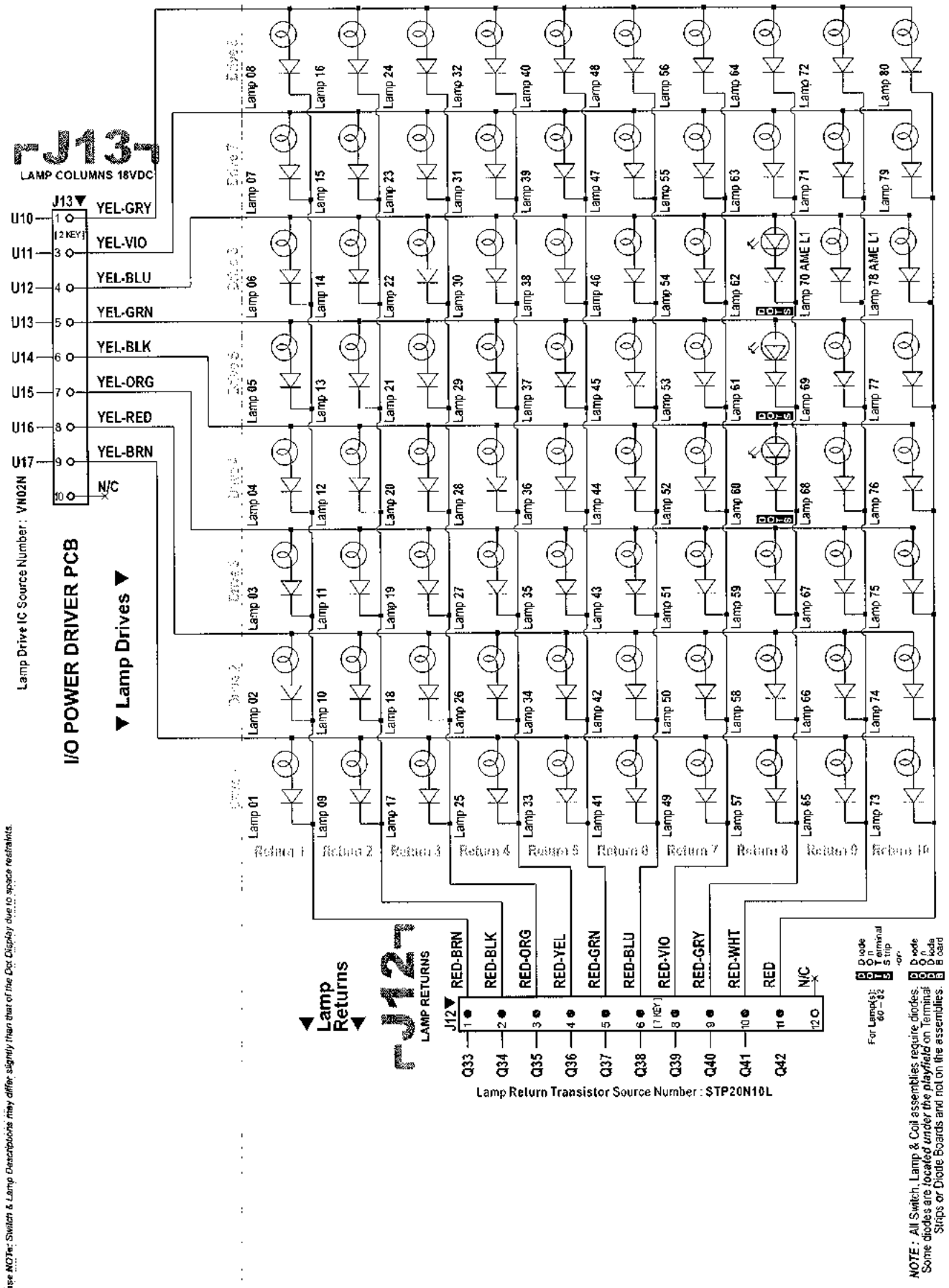

Playfield Terminal Strips

Explanation:
All Switches, Lamps & Coils require diodes. Coil diodes are located on the I/O Power Driver PCB *(in Backbox)*. Some diodes from switches *or* lamps are moved onto Terminal Strips ***(located under the playfield)***. This is done where space constraints or excessive vibrations are present. *The Switch & Lamp Matrix Grids also note which Switch or Lamp has a diode on a Terminal Strip, noted by* ***DOTS*** *(**D**iode **O**n **T**erminal **S**trip).*

Note: *Some wires 'appear' to be doubled on the lugs. The switches and lamps are in a series, so you may see 1 or 2 wires depending where the switch or lamp is in the string.*

Typical Switch Wiring & Schematic
... with Switch Diode on a Terminal Strip (DOTS)

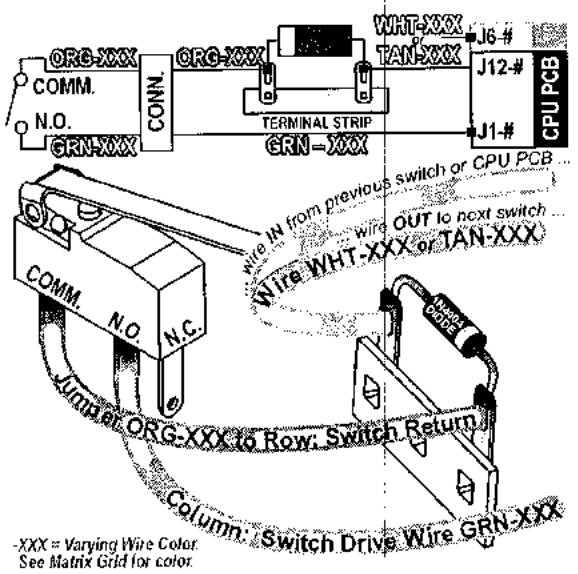

-XXX = Varying Wire Color.
See Matrix Grid for color.

Typical Lamp Wiring & Schematic
... with Lamp Diode on a Terminal Strip (DOTS)
Usually when a #555 Bulb is used as a Controlled Lamp for a Spot Light.

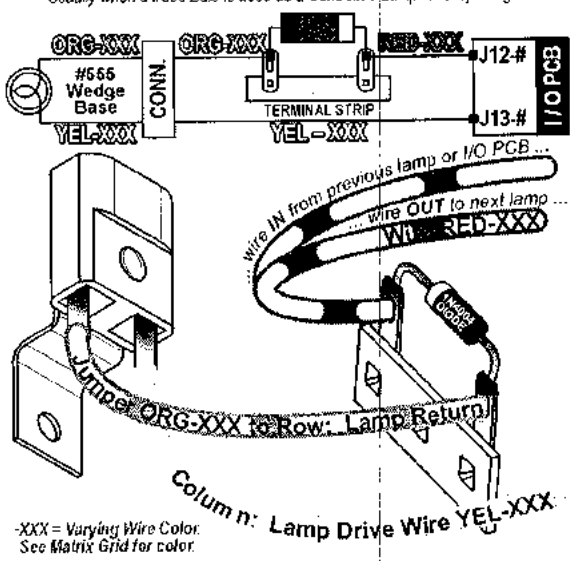

-XXX = Varying Wire Color.
See Matrix Grid for color.

Typical Lamp Wiring & Schematic
... with Lamp Diode on a Terminal Strip (DOTS)
Usually when an LED Module is used as a Controlled Lamp for a Pop Bumper.

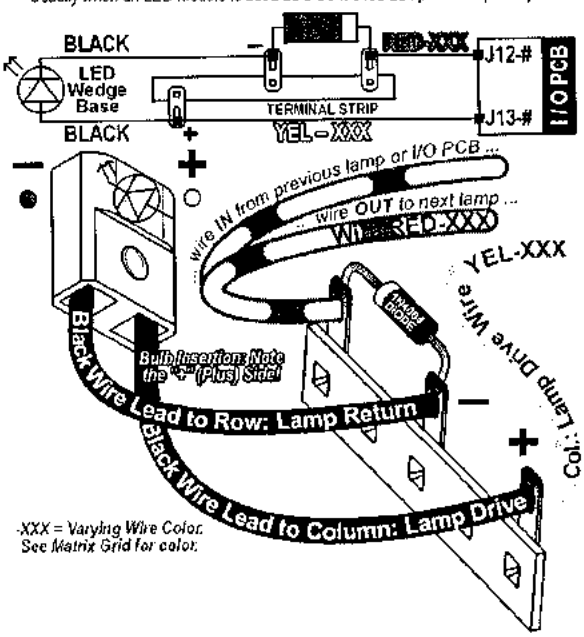

-XXX = Varying Wire Color.
See Matrix Grid for color.

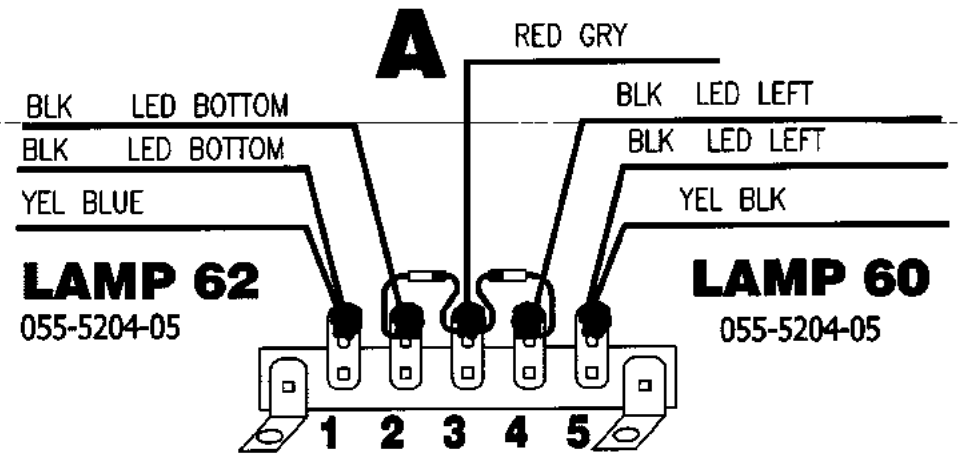

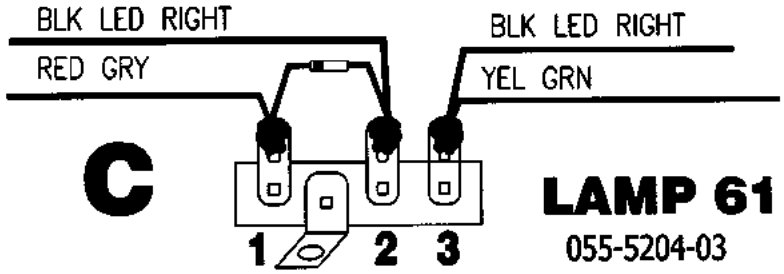

DWN. SNO	DATE 01-07-11		TITLE DTS Confirguration ROLLING STONES
1st USE Ironman	SCALE 1:1	REV -	
Stern Pinball, Inc 2020 JANICE AVE., MELROSE PARK, IL. 60160			PART NO. DTS-MAP
CADREF - I:\SOURSLER\PINBALL\IRONMAN\AUTOCAD\DTS-MAP			

#-Flipper Circuit Wiring Diagram

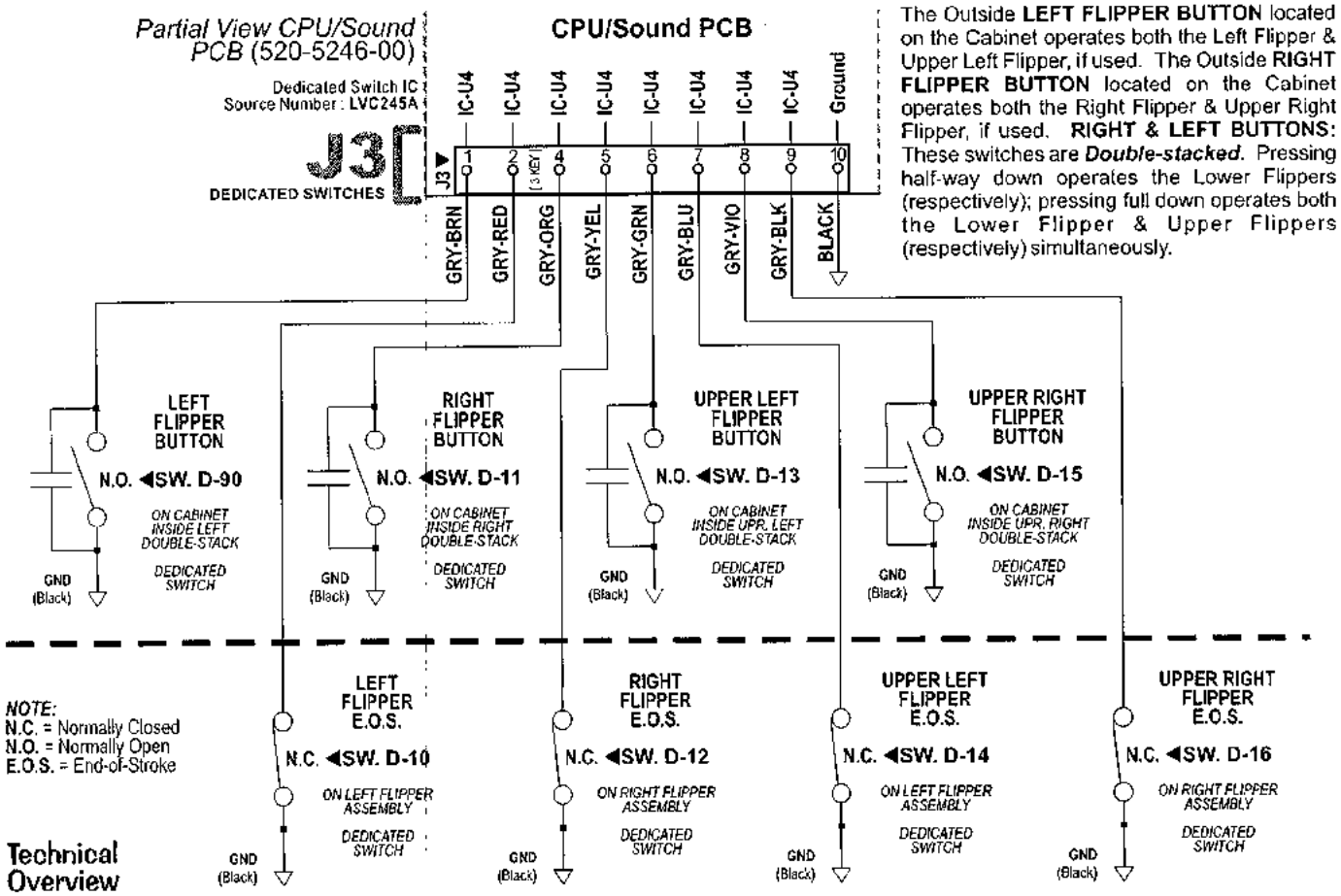

The Outside **LEFT FLIPPER BUTTON** located on the Cabinet operates both the Left Flipper & Upper Left Flipper, if used. The Outside **RIGHT FLIPPER BUTTON** located on the Cabinet operates both the Right Flipper & Upper Right Flipper, if used. **RIGHT & LEFT BUTTONS:** These switches are ***Double-stacked.*** Pressing half-way down operates the Lower Flippers (respectively); pressing full down operates both the Lower Flipper & Upper Flippers (respectively) simultaneously.

Technical Overview

Our ***Flipper System*** uses one supply voltage (+50VDC) for both ***kick*** & ***hold***. Once the **Game CPU** detects a Flipper Cabinet Switch closure *(during game play)* it applies a 40*msec* pulse to the gate of the Flipper Drive Transistor (STP22NE10L). If it continues to detect a Flipper Cabinet Switch closure *(the player holding the button in)* it will continue to pulse the flipper drive transistor 1*msec* every 12*msecs* for the duration of the hold cycle.

The **E.O.S.** (End-Of-Stroke) **Switch** serves the same function as before as it prevents foldback when the player has the flipper energized to capture balls. The **E.O.S. Dedicated Switch** is a normally closed switch which opens approximately 1/16" when the flipper is energized. The **Game CPU** will detect a switch closure if the flipper bat is forced back by a high velocity shot or rebound on the playfield and will apply another 40*msec* pulse of 50VDC to the coil.

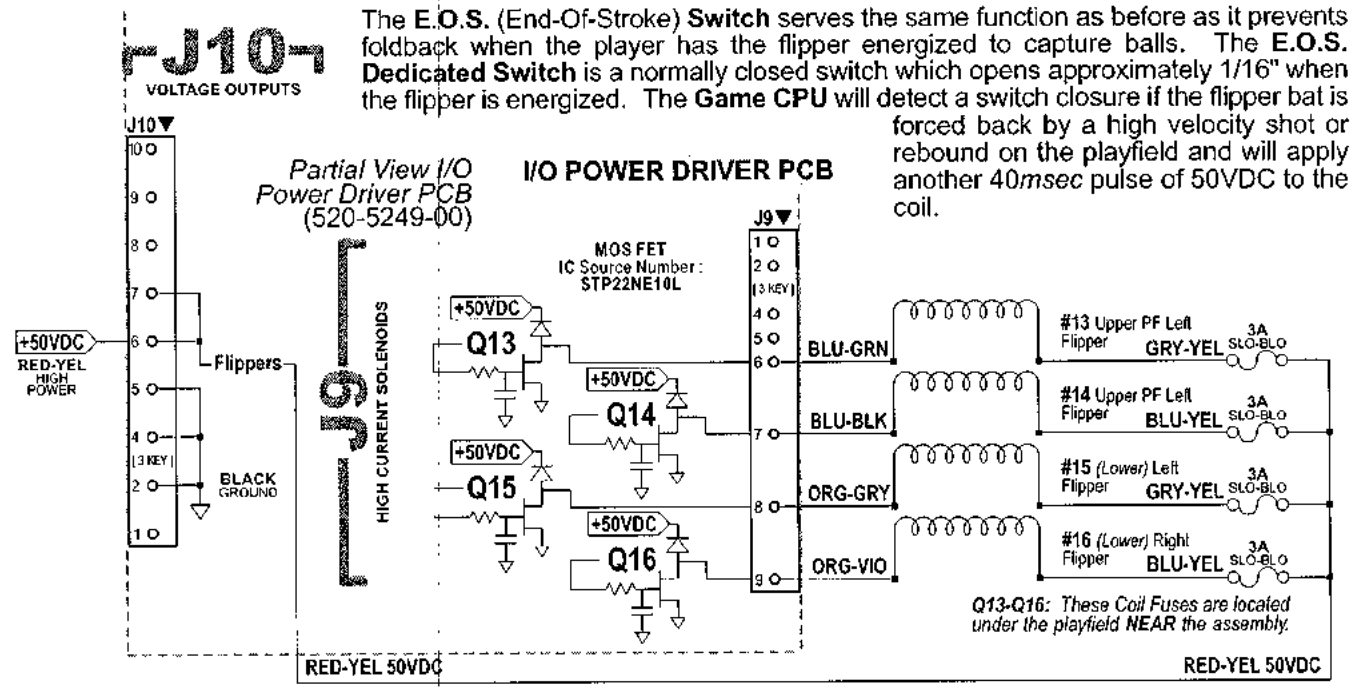

Typical Under-Playfield Fuses are rated:
3A 250v Slo-Blo
Do Not Over-Fuse

NOTe:
Coil Diodes (1N4004) are integrated on the I/O Power Driver PCB. See Coils Detailed Wiring Diagram for actual number of flippers used on this game.

Rev	Description	Eng	Date
A	Released	Sheridan	12-28-09

RELAY ASSEMBLY #1

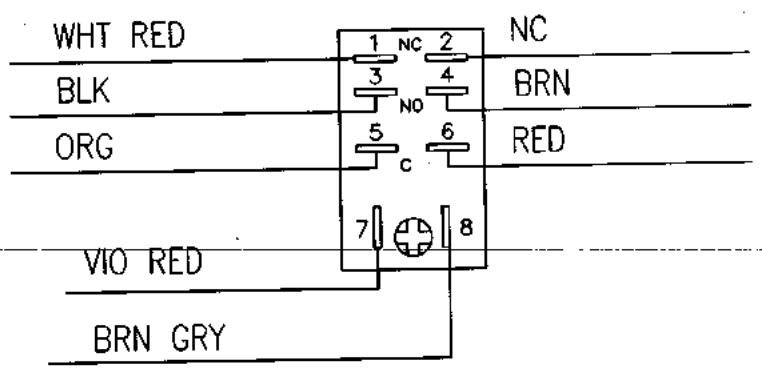

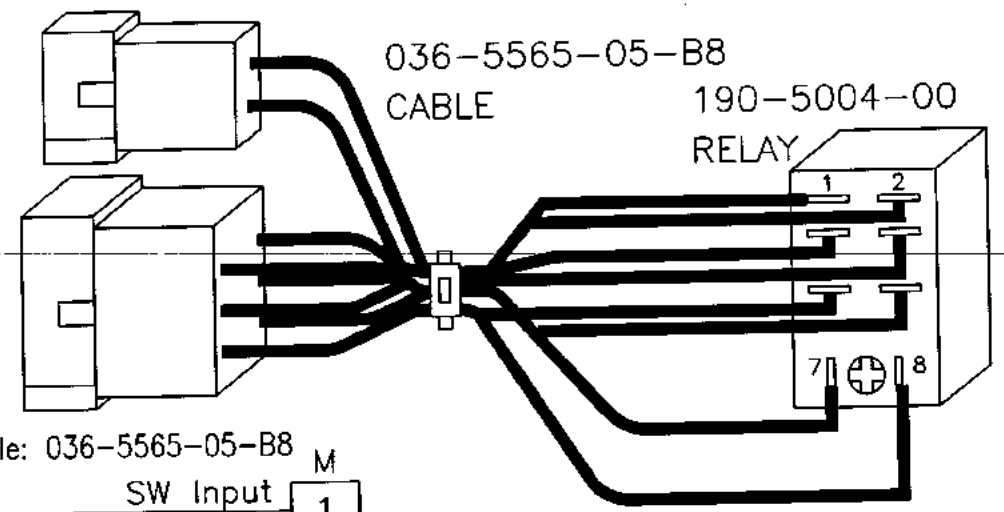

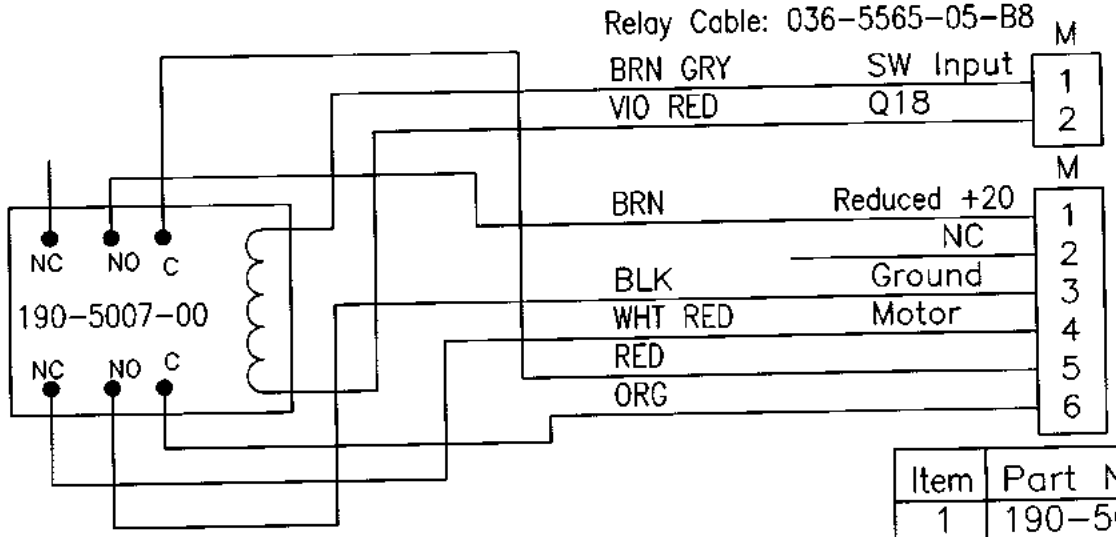

ROLLING STONES

511-6910-00

Item	Part Number	Description	Qty
1	190-5004-00	Packard Relay	1
2	036-5565-05-B8	Relay Cable	1

DWN.	DATE	TITLE
Sheridan	11-09-10	Relay and Cable Assembly
1st USE: Rolling Stones	SCALE: N/S	REV: A

Stern Pinball, Inc
2220 JANICE AVE., MELROSE PARK, IL. 60160

PART NO. 511-6910-00

V15

Rev	Description	Eng	Date
B	Released	Sheridan	12-15-10

RELAY ASSEMBLY #2

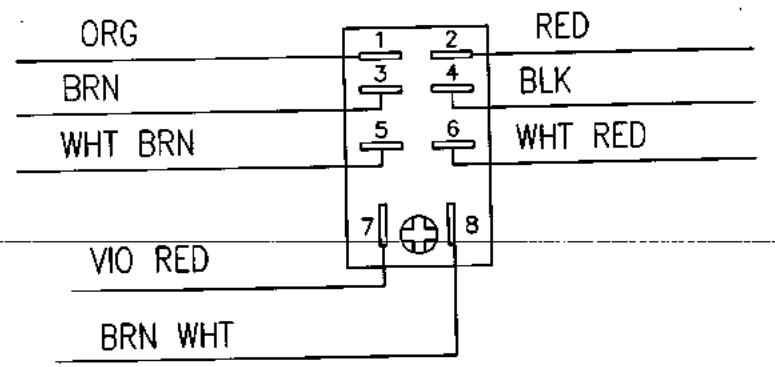

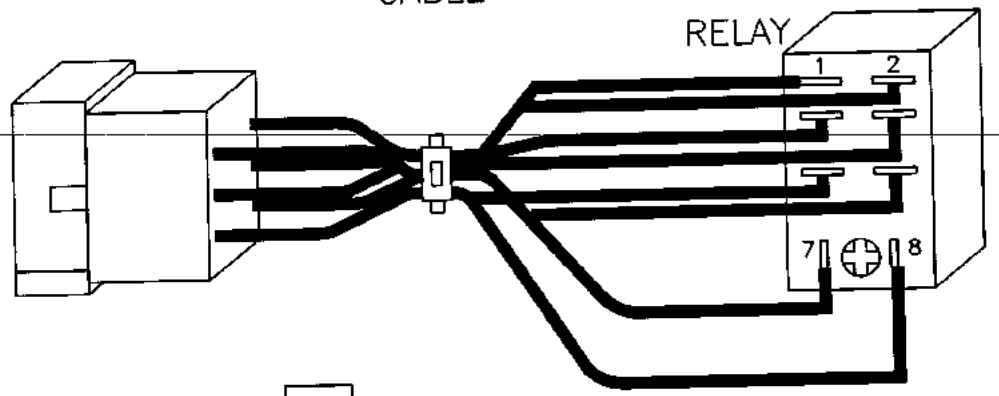

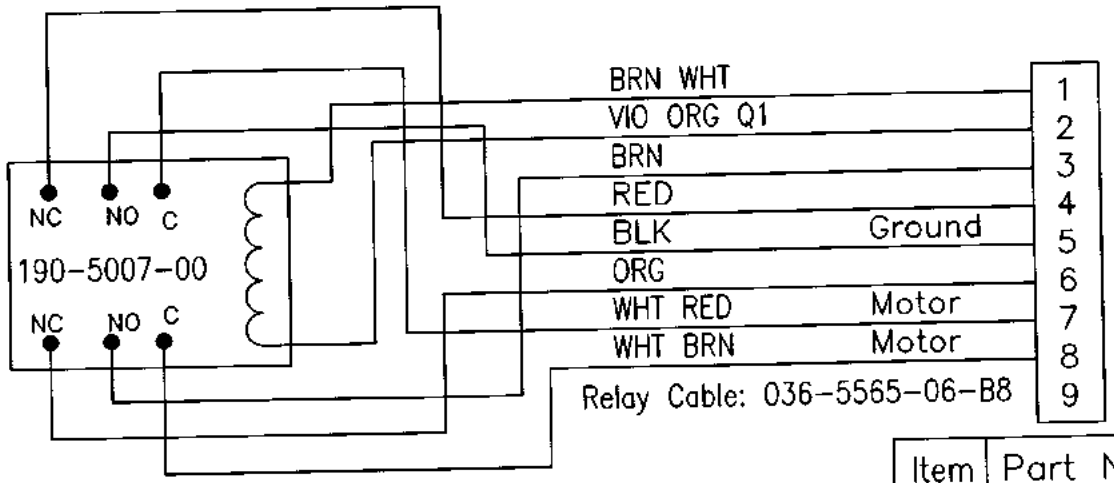

Item	Part Number	Description	Qty
1	190-5004-00	Packard Relay	1
2	036-5565-06-B8	Relay Cable	1

DWN.	DATE	TITLE
Sheridan	11-09-10	Relay and Cable Assembly
1st USE: Rolling Stones	SCALE: N/S, REV: A	

Stern Pinball, Inc
2220 JANICE AVE., MELROSE PARK, IL. 60160

PART NO. 511-6910-01

ROLLING STONES
511-6910-01

ROLLING STONES

MOTOR & RELAY WIRING

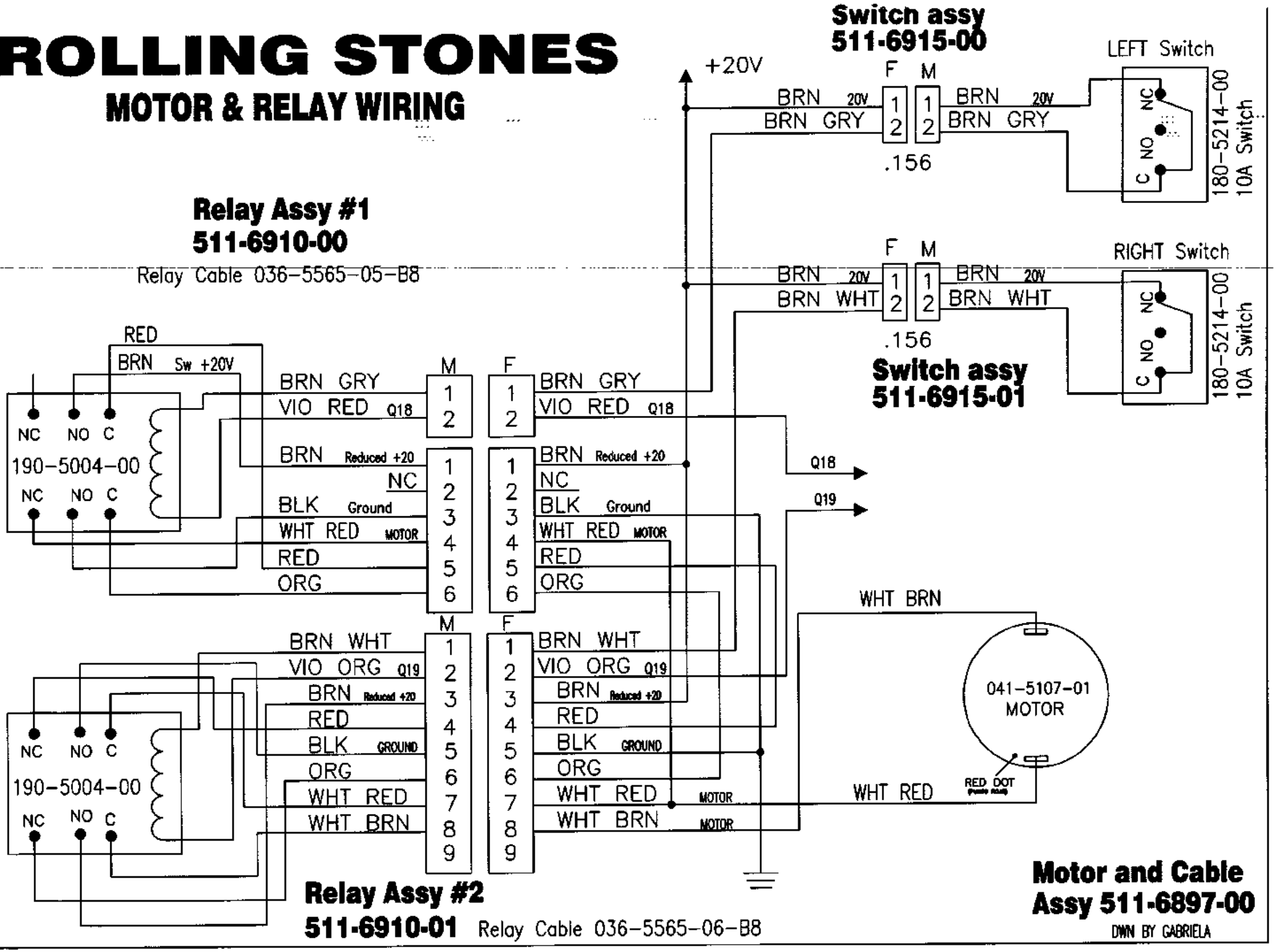

V17

SAFETY SWITCHES

Rev	Description	Eng	Date
A	Released	Sheridan	01-04-11

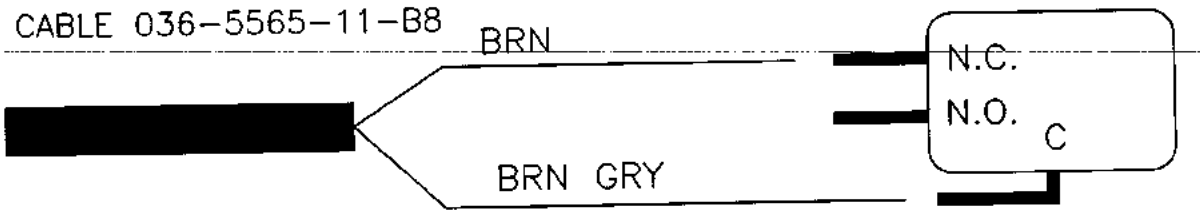

LEFT
511-6915-00

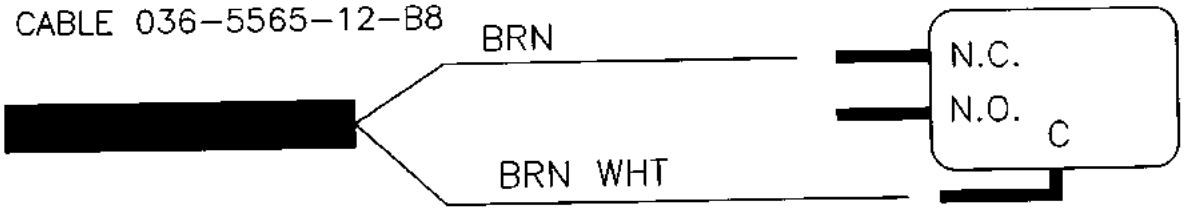

RIGHT
511-6915-01

Item	Part Number	Description	Qty
1	180-5214-00	Mini Switch	1
2	036-5565-XX-B8	Swith Cable	1

DWN. Sheridan	DATE 01-04-11		TITLE Safety Switch Assemblies
1st USE ROLLING STONES	SCALE N/S	REV A	
Stern Pinball, Inc 2220 JANICE AVE., MELROSE PARK, IL. 60160			PART NO. 511-6915-XX

511-6915-XX

ROLLING STONES PREMIUM

Magnet driver Board

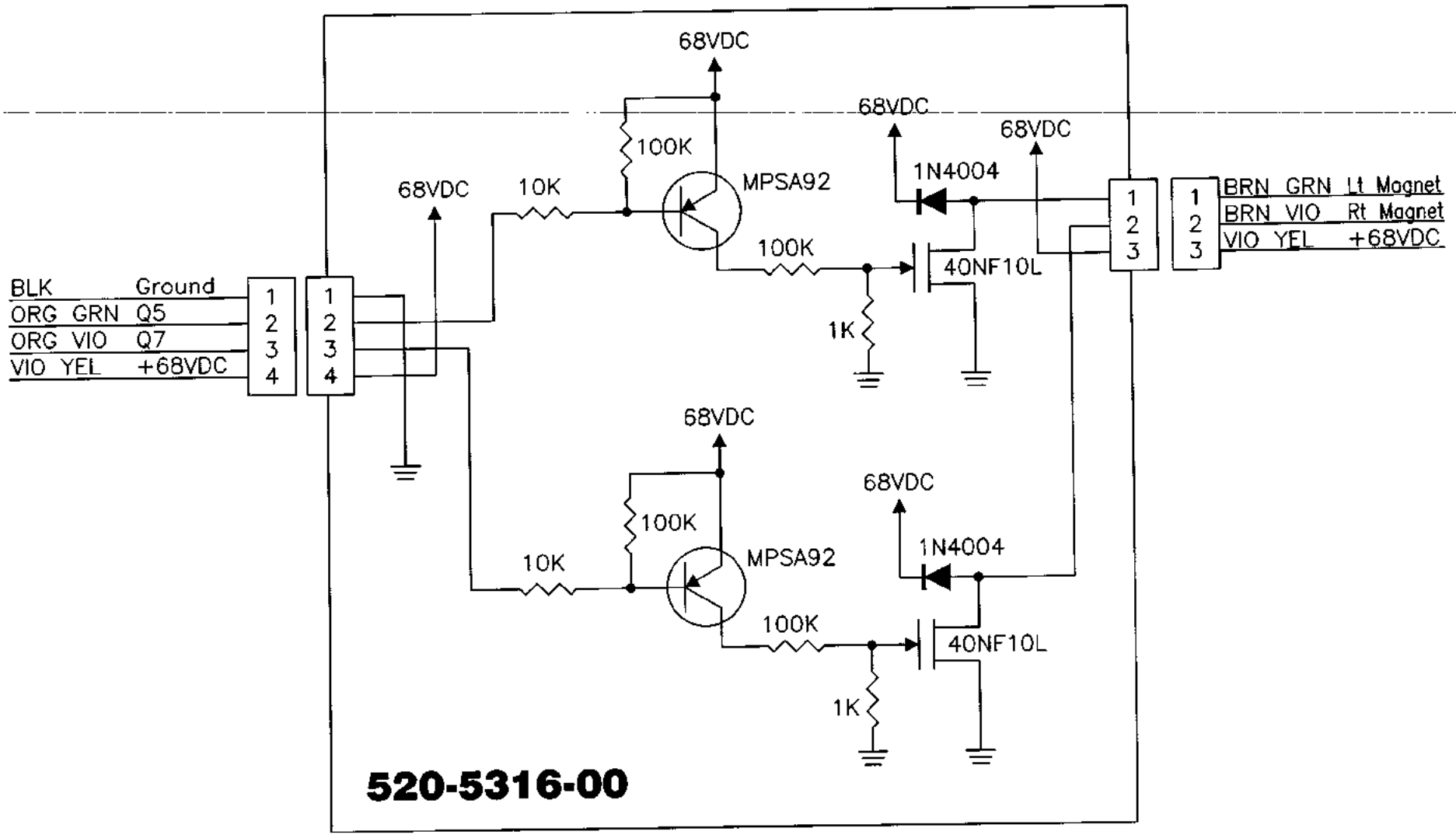

I/O POWER DRIVER PCB S.A.M. System (520-5249-00) Component Layout

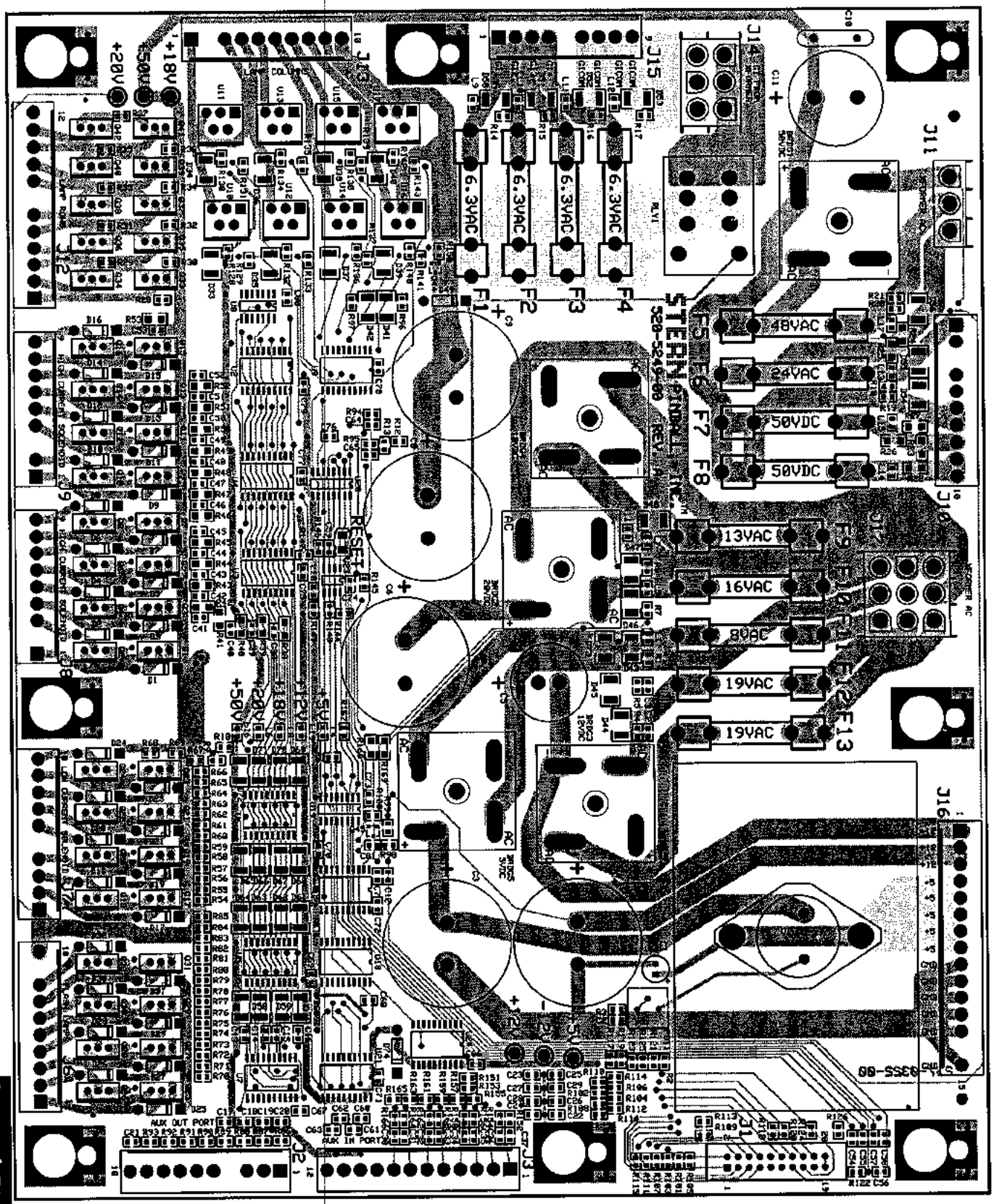

I/O POWER DRIVER PCB S.A.M. System (520-5249-00) Parts

ITEM	QTY.	SPI PART NUMBER	(MFG. P.N.)	REF-DESIGNATOR	DESCRIPTION (SM = Surface Mount)
—	1	**520-5249-00**		**I/O Power Driver PCB (S.A.M. System), Rev. A**	*(includes Items 1-67)*
1	1	121-6001-00	(101-0001807)	R9	Resistor SM 0805 Film 1.5KΩ 1/10W 5%
2	22	121-6002-00	(101-0001820)	R86, R87, R88, R89, R90, R91, R92, R93, R102, R104, R106, R108, R110, R112, R114, R116, R118, R120, R122, R124, R126, R146	Resistor SM 0805 Film 100Ω 1/10W 5%
3	12	121-6020-00	(101-0001827)	R21, R94, R95, R101, R103, R105, R107, R109, R111, R113, R115, R144	Resistor SM 0805 Film 10KΩ 1/10W 5%
4	1	121-6003-00	(101-0001845)	R2	Resistor SM 0805 Film 120Ω 1/10W 5%
5	20	121-6022-00	(101-0001905)	R7, R8, R10, R11, R12, R13, R18, R19, R98, R100, R150, R152, R154, R156, R158, R160, R162, R164, R166, R167	Resistor SM 0805 Film 1KΩ 1/10W 5%
6	2	121-6004-00	(101-0001943)	R6, R145	Resistor SM 0805 Film 220Ω 1/10W 5%
7	16	121-6005-00	(101-0001849)	R55, R57, R59, R61, R63, R65, R67, R69, R71, R73, R75, R77, R79, R81, R83, R85	Resistor SM 0805 Film 22KΩ 1/10W 5%
8	2	121-6006-00	(101-0002012)	R3, R149	Resistor SM 0805 Film 330Ω 1/10W 5%
9	3	121-6007-00	(101-0002031)	R1, R4, R5	Resistor SM 0805 Film 390Ω 1/10W 5%
10	8	121-6013-00	(101-0002035)	R151, R153, R155, R157, R159, R161, R163, R165	Resistor SM 0805 Film 39KΩ 1/10W 5%
11	9	121-6008-00	(101-0002046)	R96, R97, R99, R117, R119, R121, R123, R125, R148	Resistor SM 0805 Film 4.7KΩ 1/10W 5%
12	8	121-6014-00	(101-0002065)	R129, R131, R133, R135, R137, R139, R141, R143	Resistor SM 0805 Film 47Ω 1/10W 5%
13	1	121-6015-00	(101-0002071)	R20	Resistor SM 0805 Film 47KΩ 1/10W 5%
14	8	121-6009-00	(101-0002108)	R128, R130, R132, R134, R136, R138, R140, R142	Resistor SM 0805 Film 6.8KΩ 1/10W 5%
15	16	121-6010-00	(101-0002116)	R54, R56, R58, R60, R62, R64, R66, R68, R70, R72, R74, R76, R78, R80, R82, R84	Resistor SM 0805 Film 620Ω 1/10W 5%
16	4	121-6016-00	(101-0002126)	R14, R15, R16, R17	Resistor SM 0805 Film 680Ω 1/10W 5%
17	10	121-6011-00	(101-0002296)	R28, R29, R30, R31, R32, R33, R34, R35, R36, R37	Resistor SM 1206 Film 22KΩ 1/10W 5%
18	8	121-6012-00	(101-0002473)	R22, R23, R24, R25, R26, R27, R168, R169	Resistor SM 1206 Film 8.2KΩ 1/10W 5%
19	16	121-6013-01	(101-0002378)	R38, R39, R40, R41, R42, R43, R44, R45, R46, R47, R48, R49, R50, R51, R52, R53	Resistor SM 1206 Film 39KΩ 1/10W 5%
20	16	125-6001-00	(121-0000056)	C2, C66, C67, C68, C69, C70, C71, C72, C73, C74, C75, C76, C77, C78, C79, C80	Capacitor SM 0805 Cer. .1UF 50V 10% X7R
21	25	125-6002-00	(121-0000096)	C13, C14, C15, C16, C17, C18, C19, C20, C21, C30, C31, C32, C33, C34, C35, C36, C37, C59, C60, C61, C62, C63, C64, C65, C81	Capacitor SM 0805 Cer. 470PF 50V 5% NPO
22	18	125-6003-00	(121-0004236)	C7, C12, C38, C39, C40, C41, C42, C43, C44, C45, C46, C47, C48, C49, C50, C51, C52, C53	Capacitor SM 0805 Cer. .01UF 50V 10% X7R
23	13	125-6004-00	(121-0005318)	C22, C23, C24, C25, C26, C27, C28, C29, C54, C55, C56, C57, C58	Capacitor SM 0805 Cer. 22PF 100V 5% NPO
24	1	125-5032-00	(131-0003773)	C1	Capacitor Tht. Radial Alum. 100UF 25V 20%
25	1	125-5034-00	(131-0003864)	C5	Capacitor Tht. Radial Alum. 4700UF 35V 20%
26	1	125-5029-01	(133-0003741)	C10	Capacitor Tht. Disc Cer. .1UF 500V 20%
27	1	125-6022-00	(134-0003846)	C11	Capacitor Tht. Radial Alum. 330UF 160V 20%
28	5	125-5036-01	(134-0004000)	C3, C4, C6, C8, C9	Cap. Tht. Rad. Al. 15000UF 35V 20% Snap-In
29	34	112-6001-01	(183-0004374)	D1, D2, D3, D4, D5, D6, D7, D8, D9, D10, D11, D12, D13, D14, D15, D16, D17, D18, D19, D20, D21, D22, D23, D24, D25, D26, D27, D28, D29, D30, D31, D32, D49, D74	Diode Tht. DO-41 1N4004 400V 1A
30	5	112-5000-00	(187-0004700)	BRDG1, BRDG2, BRDG3, BRDG4, BRDG5	Bridge Tht. Fullwave 100V 35A MB-35
31	10	110-0088-01	(203-0003591)	Q33, Q34, Q35, Q36, Q37, Q38, Q39, Q40, Q41, Q42	Fet Tht. TO-220 STP20NE06L NFet 60V 20A
32	16	110-0106-00	(203-0003592)	Q1, Q2, Q3, Q4, Q5, Q6, Q7, Q8, Q9, Q10, Q11, Q12, Q13, Q14, Q15, Q16	Fet Tht. TO-220 20N10L NFet 100V 20A
33	8	110-0089-00	(203-0003597)	U10, U11, U12, U13, U14, U15, U16, U17	Fet Tht. PENTAWAT VN02N NFet HighSide 26V 6A
34	2	110-0069-01	(211-0003569)	Q44, Q45	Trans. SM SOT-23 MMST3904 NPN 40V 0.2A
35	16	110-0067-00	(213-0003565)	Q17, Q18, Q19, Q20, Q21, Q22, Q23, Q24, Q25, Q26, Q27, Q28,Q29, Q30, Q31, Q32	Transistor Tht. TO-220 TIP122 NPN 100V 5A
36	3	100-6003-00	(221-0000972)	U18, U22, U24	I.C. SM SOIC 74HC245 Oct. Bus. Xcvr.
37	1	100-6000-00	(221-0011253)	U23	I.C. SM SOIC DS1832S, SO-8
38	8	100-5056-00	(221-0001287)	U2, U3, U4, U5, U6, U7, U9, U21	I.C. SM SOIC 74HCT273 Oct. D F-F
39	2	100-6001-00	(221-0003728)	U19, U20	I.C. SM SO 74LS138D Hex Inverter; 3-8 DC/DMX
40	1	100-6002-00	(221-0011135)	U8	I.C. SM SOIC 74LS74AD SOIC-14
41	1	100-0356-00	(225-0003582)	U1	I.C. Tht. TO-3 LM338 5A Adjust. Voltage Reg.
42	5	045-	(315-0003427)	J2, J6, J7, J10, J13	Con. Tht. Hdr. 10 Pin, 1 Row .156"
43	1	045-	(315-0006910)	J1	Con. Tht. Hdr. 20 Pin, 2 Row .1"
44	2	045-	(315-0003430)	J3, J12	Con. Tht. Hdr. 12 Pin, 1 Row .156"
45	1	045-	(315-0003432)	J16	Con. Tht. Hdr. 15 Pin, 1 Row .156"
46	1	045-	(315-0003503)	J11	Con. Tht. Pwr. 3 Pin, 1 Row .25"
47	1	045-	(315-0003504)	J14	Con. Tht. Pwr. 6 Pin, 2 Row .25"
48	1	045-	(315-0003505)	J17	Con. Tht. Pwr. 9 Pin, 3 Row .25"
49	3	045-	(315-0003821)	J8, J9, J15	Con. Tht. Hdr. 9 Pin, 1 Row .156"
50	2	200-5000-08	(407-0003117)	F6, F8	Fuse 3 Amp 250V Slo-Blo (Glass, Tht. 3AG)
51	2	200-5000-06	(407-0003118)	F7, F11	Fuse 4 Amp 250V Slo-Blo (Glass, Tht. 3AG)
52	7	200-5000-01	(407-0003119)	F1, F2, F3, F4, F10, F12, F13	Fuse 5 Amp 250V Slo-Blo (Glass, Tht. 3AG)
53	1	200-5000-03	(407-0003121)	F5	Fuse 7 Amp 250V Slo-Blo (Glass, Tht. 3AG)
54	1	200-5000-05	(407-0003122)	F9	Fuse 8 Amp 250V Slo-Blo (Glass, Tht. 3AG)
55	1	121-5039-00	(415-0004788)	POT1	Potento THT 50Ω Single Top Adjust. Trimr.
56	1	165-6000-00	(425-0006913)	L18	LED SM Yellow 0805 LED
57	5	165-6001-00	(425-0007753)	L4, L6, L8, L16, L19	LED SM Green Ultrabright Top
58	13	165-6002-00	(425-0007755)	L1, L2, L3, L5, L7, L9, L10, L11, L12, L15, L17	LED SM Red Ultrabright Top 0805 LED
59	1	190-5002-00	(448-0004778)	RLY1	Relay Tht. GW DPDT10A DC24 2400VA PC MNT
60	1	127-5001-00	(461-0003520)	*for* BRDG 4, BRDG 5	Heatsink, Sq. Finned Ba TO-220 Avid 531102
61	1	127-5001-02	(461-0003534)	*for* U1	Heatsink All Large Finned Alum. TO-3
62	1	127-5001-04	(579103B00000G)	*for* U1 *on* TO-3 LM338 5A Adj. Volt. Reg.	Heatsink, Circular Finned (Mfg. Aavid)
63	4	240-5008-00	(503-0004469)	*2 pcs. for* U1 *1 pc. each for* BRDG 4 & 5	#6-32 Keps Nut
64	26	205-0004-00	(503-0004667)	*2 pcs. each for* F1 - F13	Fuseclip with End Stops (+ Ears)
65	4	237-5504-00	(504-0004610)	*2 pcs. for* U1 *1 pc. each for* BRDG 4 & 5	#6-32 X 3/4" PPH MS (Zinc) Screw
66	2	254-5007-02	(507-0004544)	*for* BRDG 4 & 5 (Mfg. .169" I.D. X 9/32" O.D. X 1/4")	1/4" Slf. Rtn. Spacer White
67	5	254-5007-05	(507-0004547)	*for* BRDG1, 2 & 3 and *for* Mounting Holes (Mfg .169" I.D. X 9/32" O.D. X 5/16")	5/16" Slf. Rtn. Spacer White

PRO

CPU / SOUND PCB S.A.M. System (520-5246-00) Component Layout

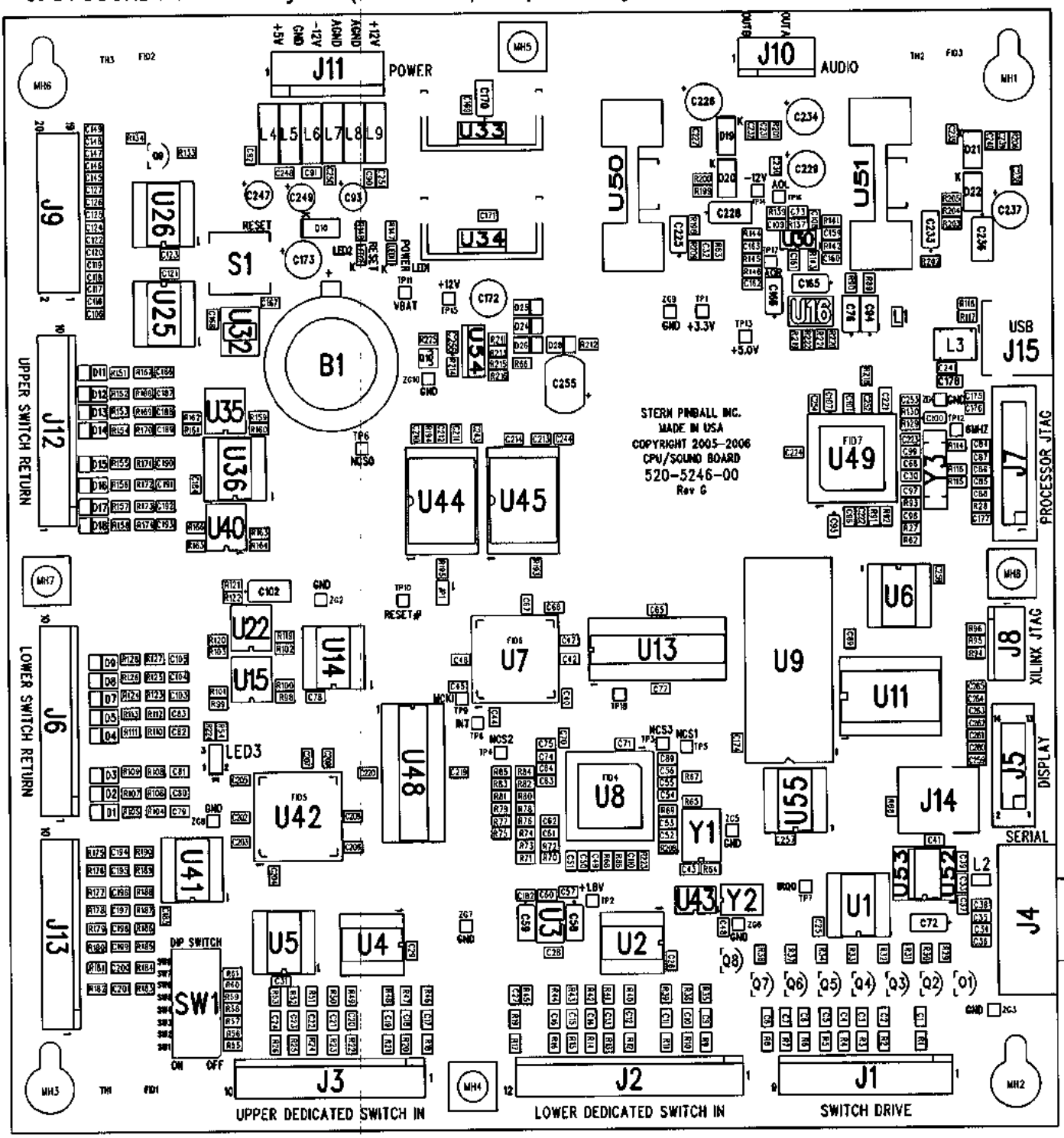

CPU / SOUND PCB S.A.M. System (520-5246-00) Component Parts

ITEM	QTY.	SPI PART NUMBER	(MFG. P.N.)	REF-DESIGNATOR	DESCRIPTION (SM = Surface Mount)
	1	**520-5246-00**		CPU/Sound PCB (S.A.M. System), Rev. G	*(includes Items 1-90)*
1	3	121-6017-00	(101-0001790)	R27, R202, R212	Resistor SM 0805 0.0Ω 1/10W 5%
2	2	121-6108-00	(101-0001792)	R201, R206	Resistor SM 0805 1.0Ω 1/10W 5%
3	24	121-6001-00	(101-0001807)	R9, R10, R11, R12, R13, R14, R15, R16, R18, R20, R21, R22, R23, R24, R25, R26, R175, R176, R177, R178, R179, R180, R181, R182	Resistor SM 0805 1.5KΩ 1/10W 5%
4	3	121-6002-00	(101-0001820)	R147, R148, R211	Resistor SM 0805 Film 100Ω 1/10W 5%
5	24	121-6019-00	(101-0001823)	R64, R66, R67, R68, R70, R71, R72, R73, R74, R75, R76, R77, R78, R79, R80, R81, R82, R83, R84, R85, R89, R90, R92, R208	Resistor SM 0805 100KΩ 1/10W 5%
6	33	121-6020-00	(101-0001827)	R28, R65, R91, R98, R99, R100, R101, R102, R103, R119, R120, R134, R137, R139, R141, R142, R143, R144, R145, R146, R159, R160, R161, R162, R163, R164, R165, R166, R193, R194, R195, R223, R225	Resistor SM 0805 Film 10KΩ 1/10W 5%
7	2	121-6021-00	(101-0001880)	R117, R118	Resistor SM 0805 15KΩ 1/10W 5%

Parts List Continued Next Page.

CPU / SOUND PCB S.A.M. System (520-5246-00) Parts *Continued*

ITEM	QTY.	SPI PART NUMBER	(MFG. P.N.)	REF-DESIGNATOR	DESCRIPTION (SM = Surface Mount)
8	47	121-6022-00	(101-0001905)	R1, R2, R3, R4, R5, R6, R7, R8, R29, R30, R31, R32, R33, R34, R37, R38, R55, R56, R57, R58, R59, R60, R61, R94, R95, R96, R105, R107, R109, R111, R113, R114, R115, R116, R124, R126, R128, R133, R151, R152, R153, R154, R155, R156, R157, R158, R218, LED2	Resistor SM 0805 1KΩ 1/10W 5%
9	19	121-6004-00	(101-0001943)	R104, R106, R108, R110, R112, R123, R125, R127, R167, R168, R169, R170, R171, R172, R173, R174, R213, R214, R215	Resistor SM 0805 Film 220Ω 1/10W 5%
10	4	121-6005-00	(101-0001849)	R198, R200, R203, R205	Resistor SM 0805 Film 22KΩ 1/10W 5%
11	5	121-6023-00	(101-0001889)	R45, R86, R88, R121, R122	Resistor SM 0805 3.3KΩ 1/10W 5%
12	3	121-6024-00	(101-0002009)	R69, R129, R130	Resistor SM 0805 33Ω 1/10W 5%
13	2	121-6006-00	(101-0002012)	R54, R93	Resistor SM 0805 Film 330Ω 1/10W 5%
14	24	121-6013-00	(101-0002035)	R35, R36, R39, R40, R41, R42, R43, R44, R46, R47, R48, R49, R50, R51, R52, R53, R183, R184, R185, R186, R187, R188, R189, R190	Resistor SM 0805 Film 39KΩ 1/10W 5%
15	2	121-6008-00	(101-0002046)	R17, R19	Resistor SM 0805 Film 4.7KΩ 1/10W 5%
16	4	121-6014-00	(101-0002065)	R219, R220, R221, R222	Resistor SM 0805 Film 47Ω 1/10W 5%
17	3	121-6025-00	(101-0002067)	R199, R204, R216	Resistor SM 0805 470Ω 1/10W 5%
18	1	121-6015-00	(101-0002071)	R209	Resistor SM 0805 Film 47KΩ 1/10W 5%
19	99	125-6001-00	(121-0000056)	C25, C26, C27, C29, C31, C33, C37, C39, C40, C41, C42, C43, C44, C45, C46, C47, C48, C51, C52, C54, C62, C64, C65, C67, C68, C69, C71, C75, C77, C78, C79, C80, C81, C82, C83, C89, C90, C91, C92, C103, C104, C105, C121, C123, C168, C169, C171, C174, C175, C176, C177, C182, C184, C185, C186, C187, C188, C189, C190, C191, C192, C193, C202, C203, C204, C205, C206, C207, C208, C209, C210, C211, C212, C213, C214, C219, C220, C222, C223, C224, C227, C230, C231, C232, C235, C238, C239, C240, C241, C243, C244, C248, C250, C251, C252, C253, C254, C257, C258	Capacitor SM 0805 Cer. .1UF 50V 10% X7R
20	3	125-6013-00	(121-0000077)	C28, C57, C60	Capacitor SM 0805 Cer. 1UF 10V 10% X7R
21	1	125-6014-00	(121-0000086)	C97	Capacitor SM 0805 Cer. 3300PF 50V 5% X7R
22	7	125-6002-00	(121-0000096)	C259, C260, C261, C262, C263, C264, C265 *Rev. G as Mods on back of PCB, Rev. H in place (FCC Caps Plasma Ribbon Cable)*	Capacitor SM 0805 Cer. 470PF 50V 5% NPO
23	3	125-6015-00	(121-0000269)	C102, C228, C236	Capacitor SM Case D Tant 22UF 25V 20%
24	11	125-6003-00	(121-0004236)	C1, C2, C3, C4, C5, C6, C7, C8, C110, C161, C167	Capacitor SM 0805 Cer. .01UF 50V 10% X7R
25	49	125-6016-00	(121-0004245)	C9, C10, C11, C12, C13, C14, C15, C16, C17, C18, C19, C20, C21, C22, C23, C24, C49, C50, C53, C55, C56, C61, C63, C70, C74, C106, C116, C117, C118, C119, C120, C122, C124, C125, C126, C127, C145, C146, C147, C148, C149, C194, C195, C196, C197, C198, C199, C200, C201	Capacitor SM 0805 Cer. 47PF 50V 5% NPO
26	4	125-6017-00	(121-0005317)	C95, C100, C107, C256	Capacitor SM Case A Tant 2.2UF 16V 10%
27	6	125-6004-00	(121-0005318)	C30, C34, C35, C36, C38, C66	Capacitor SM 0805 Cer. 22PF 100V 5% NPO
28	2	125-6005-00	(121-0006113)	C178, C221	Capacitor SM 1206 Cer. 4.7PF 16V 20% Y5V
29	2	125-6006-00	(121-0007394)	C159, C163	Capacitor SM 603 Cer. 1500PF 25V 10% X7R
30	10	125-6007-00	(121-0007853)	C58, C59, C72, C76, C94, C165, C166, C170, C225, C233	Capacitor SM Case C Tant 10UF 16V 20%
31	1	125-6018-00	(121-0010097)	C98	Cap. SM 805 Cer. .033UF 50V +80/-20% Y5V
32	4	125-6009-00	(121-0010493)	C32, C73, C160, C162	Capacitor SM 805 Cer. 680PF 50V 5% NPO
33	6	125-6019-00	(134-0005415)	C172, C173, C226, C229, C234, C237	Capacitor Tht. Radial Alum. 100UF 35V 20%
34	3	125-6020-00	(134-0007336)	C93, C247, C249	Capacitor Tht. Radial Alum. 47UF 35V 20%
35	1	125-6010-00	(139-0006487)	C255	Capacitor Tht. .22UF 5.5V, Gold, SD, Vert
36	6	125-6011-00	(161-0004959)	L4, L5, L6, L7, L8, L9	Ind.-SM Ferrite100Ω 1234 Smt.
37	2	125-6012-00	(161-0007286)	L1, L2	Ind.-SM 805 Bead 600Ω 100Mhz 25% 500mA
38	1	125-6021-00	(161-0009686)	L3	Ind.-SM EP Inductor15uH 1100mA 20%
39	20	112-6000-00	(181-0004347)	D1, D2, D3, D4, D5, D7, D8, D9, D11, D12, D13, D14, D15, D16, D17, D18, D24, D25, D26, D28	Diode SM MiniMELFDL/LL4148 100V 500mW
40	5	112-6001-00	(181-0004478)	D10, D19, D20, D21, D22	Diode SM MELF DL4004 400V 1.0A
41	1	110-6000-00	(201-0006808)	Q10	Fet-SM SOT-23 MMBF170 N-Chnnl. Fet
42	9	110-0069-00	(213-0003546)	Q1, Q2, Q3, Q4, Q5, Q6, Q7, Q8, Q9	Transistor Tht. TO-92 2N3904 NPN 40V 0.2A
43	1	124-6000-00	(213-0005687)	U34	Trans. Tht. TO-220 LT1086 3.3V 1.5A Volt Reg.
44	8	100-6004-00	(221-0001000)	U2, U4, U5, U14, U25, U26, U36, U41	I.C.-SM SO 74LVC245 Oct. Bus Xcvr.
45	1	100-5048-00	(221-0003716)	U55	I.C.-SM SOIC 74HCT245DW Octal Line Xvr. W/3S
46	4	100-6005-00	(221-0003718)	U15, U22, U35, U40	I.C.-SM SO LM339 Quad Diff. Comparator
47	1	100-6006-00	(221-0005249)	U43	I.C.-SM SOIC DS1302 Time Keeper
48	1	100-6008-00	(221-0006578)	U52	I.C.-SM SOIC SP232A SO-16
49	1	100-6009-00	(221-0006914)	U32	I.C.-SM SOT-223 DS1233A2-15 Reset
50	1	100-6007-00	(221-0006919)	U30	I.C.-SM OPA2353 Dual CMOS O/A MSOP-8
51	1	100-6018-00	(221-0006940)	U48	I.C.-SM SOJ IDT71V016SA15Y SOJ-44
52A	1	100-6016-00	(221-0007056)	U7 *(must be programmed)* XC95144XL program for U7	I.C.-SM TQFP CPLD 144 Macro Cell 3.3V)
52B	1	100-6017-00	(221-0007056)	U42 *(must be programmed)* XC95144XL program for U42	I.C.-SM TQFP CPLD 144 Mac. Cell 3.3V)
53	1	124-6001-00	(221-0007298)	U3	I.C.-SM SOIC LT1503CS8-1.8
54	1	100-6012-00	(221-0010735)	U11	I.C.-SM SOIC CY62128 SRAM 128Kx8 3V LP SO32
55	1	100-6013-00	(221-0010736)	U49	I.C.-SM QFP-L AT43 USB380 Processor USB 2.0
56	1	100-6014-00	(221-0010738)	U16	I.C.-SM SSOP PCM1755 24-Bit Audio DAC 16-PI
57	1	100-6010-00	(221-0010978)	U13 **BOOT FLASH LOCATION U9 8MB EPROM**	I.C.-SM SOJ IDT71V416S15Y SOJ-44
58	1	100-6011-00	(221-0010981)	U44	I.C.-SM TSOP S29GL256N11 256MB Flash
59	1	100-6015-00	(221-0011102)	U1	I.C.-SM SOIC 74LV273 SOIC-20
60	1	124-6002-00	(225-0003581)	U54	I.C.-Tht. TO-220 LM317T Adjustable Volt Reg.
61	2	100-5016-20	(225-0003635)	U50, U51 960-5016-00 : *(No File, Unprogrammed)*	I.C.-Tht. Pentawat TDA2030 18W Amplifier
62	1	124-6003-00	(225-0006921)	U33	I.C.-Tht. TO-220 LM340T 5V 1A Volt Regulator
63	1	077-5217-00	(301-0004285)	SU9	Socket DIP/SIP 32-Pin, Tin, .6, Dip
64	2	n/a	(303-0005944)	TP1, TP2 965-BOOT-SAM: *(Latest Version Programmed)*	Test Pt. All Test Point, White, Miniature
65	1	045-	(315-0003511)	JP1	Con.-Tht. Header 2 Pin, 1 Row, VT, Tin, .1"
66	1	045-	(315-0004097)	J11	Con.-Tht. Header 6 Pin, 1 Row, VT, Tin, .156"
67	1	045-	(315-0004121)	J1	Con.-Tht. Header 9 Pin, 1 Row, VT, Tin, .156"
68	4	045-	(315-0004122)	J3, J6, J12, J13	Con.-Tht. Hdr. 10 Pin, 1 Row, VT, Tin, .156"
69	1	045-	(315-0004124)	J8	Con.-Tht. Header 6 Pin, 1 Row, VT, Tin, .1"
70	1	045-	(315-0006776)	J14	Con.-Tht. Hdr. 6 Pos. Phone Jack, Vertical
71	1	045-	(315-0006910)	J9	Con.-Tht. Header 20 Pin, 2 Row, VT, Tin, .1"
72	1	045-	(315-0009252)	J10	Con.-Tht. Header 4 Pin, 1 Row, VT, Tin, .156"
73	1	045-	(315-0009520)	J2	Con.-Tht. Hdr. 12 Pin, 1 Row, VT, Tin, .156"
74	1	045-	(315-0009626)	J15	Con.-Tht. 4 Pos. USB Recpt. VT, WHT/BLK
75	1	045-	(315-0009627)	J4	Con.-Tht. D-Sub 9 Pos, VT, w/lock & Hex Sc.
76	1	045-	(315-0010979)	J5	Con.-Tht. Hdr. 14 Pin, 2 Row, VT, Gold, .1" Shrou.
77	1	140-6000-00	(401-0007295)	Y2	XTAL.-SM 32.768MHz CI 12.5 FSR327
78	1	140-6001-00	(401-0010737)	Y3	XTAL.-SM 600MHz 20PF
79	1	140-6002-00	(403-0005489)	Y1	Osc.-SM SO 400MHz 5V Tristate CMOS
80	1	515-	(421-0010979)	B1	Battery (Coin Cell 24.5mm) Holder with clip
81	1	000-0644-01	(421-0010980)	*for* B1	Coin Cell 3V 265maH 24X3 mm (CR2430)
82	1	165-6003-00	(425-0005320)	LED1	LED SM Green 0805 LED
83	1	165-6004-00	(425-0010803)	LED3	LED SM Dual Red/Green 1210 Top
84	1	182-5002-00	(450-0004750)	SW1	8-Position Dip Switch Spst. 16 Pin X8 Slide 5VDC 100ma
85	1	182-5001-00	(450-0004752)	S1	White Push-Button Reset Switch Spst. 4 Pin Momentary 24VDC 50ma
86	2	127-5001-00	(461-0003520)	*for* U33, U34	Heatsink All Vert Mount Ba TO-220
87	2	127-5001-01	(461-0003528)	*for* U50, U51	Heatsink All Vert Mount Ba TO-220
88	4	237-5909-01	(504-0004604)	*for Heat Sinks* U33, U34, U50, U51	#4-40 X 3/8" PPH MS Sems (Zinc) Screw
89	4	240-5318-00	(503-0004457)	*for Heat Sinks* U33, U34, U50, U51	#4-40 Keps Nut
90	4	254-5007-05	(507-0004547)	*for* Mntg. Holes (Mtg. .169" I.D. X 9/32" O.D. X 5/16")	5/16" Slf. Rtn. Spacer White